Project		Catalog #		Type	
Prepared by		Notes		Date	



HALO Commercial

PR4S | PR4M

4-inch LED surface mounting lensed downlight and wall wash

Typical Applications

Office • Healthcare • Hospitality • Institutional

Interactive Menu

- Order Information page 2
- Product Specifications page 3
- Photometric Data page 4
- Energy & Performance Data page 6
- Product Warranty

Product Certification

Product Features

Top Product Features

- Selectable lumens 1000/1500/2000 and 2000/3000/4000
- SeleCCTable color temperature 3000K/3500K/4000K
- Available in 80 CRI or 90 CRI
- Medium / Wide beam distribution reversible “flip” lens
- Wall wash accessory kit

Dimensional and Mounting Details

HIGH LUMEN

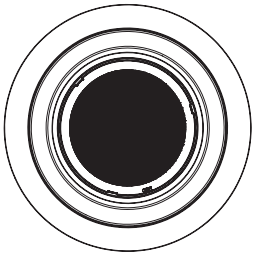

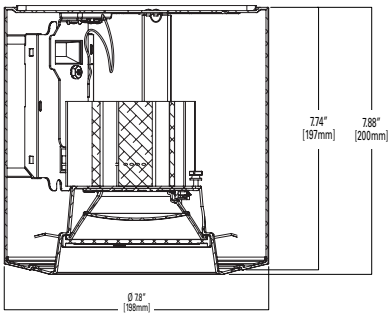

Scale

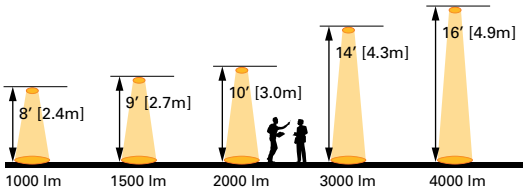

Nominal values for 15 - 20 footcandles at nadir.

additional product diagrams

Order Information

Icon Key: Δ Configurable Product

SAMPLE ORDER NUMBER: **PR4SFS24D010MW – PR4M24MD8FSMW**

A complete luminaire consists of a surface cylinder and LED module, ordered separately

Mounting Frame | Lumens | Input / Control | Finish

Standard Driver 120-277VAC, 0-10V analog dimming

Mounting	Lumens	Input / Control	Finish
PR4S = 4" lens aperture, surface mount cylinder	**Field Selectable** **FS12** = field selectable 1000, 1500 and 2000 lumens (nominal), use with PR4M12* LED modules only (1) **FS24** = field selectable 2000, 3000 and 4000 lumens (nominal), use with PR4M24* LED modules only (1) **Discrete (fixed) Factory Set** (2) **10** = 1000 lumens (nominal), use with PR4M12* LED modules only **15** = 1500 lumens (nominal), use with PR4M12* LED modules onlys **30** = 3000 lumens (nominal), use with PR4M24* LED modules only	**D010** = 120-277VAC 50/60Hz, 0-10V analog , 1%-100% dimming	**MW** = matte white **MMS** = matte metallic silver **BZ** = bronze
Notes	**Notes** (1) FS12 factory preset 2000 lumens in PR4M12 LED module. FS24 factory preset 4000 lumens in PR4M24 LED module. (2) Driver has fixed lumen output. Lumen selector switch on LED modules do not change lumens in fixed output housings.	**Notes**	**Notes**

LED Module | Lumen Range | Distribution | CRI / CCT | Finish | Accessories

LED Module	Lumen Range	Distribution	CRI / CCT	Finish	Accessories
PR4M = 4" lens aperture, LED trim/module with self-flanged shallow reflector. For use with PR4 series housing frames, retrofit frames, and surface cylinders.	**12** = field selectable low lumen range 1000, 1500 and 2000 lumens (nominal). Factory pre-set for 2000 lumens. Use with PR4SFS12*, PR4S10*, PR4S15* surface cylinders. **24** = field selectable high lumen range 2000, 3000 and 4000 lumens (nominal). Factory pre-set for 4000 lumens. Use with PR4SFS24*, PR4S30* surface cylinders.	**MD** = medium / wide beam reversible "flip" lens. Factory set for medium. Tool-less twist-to-lock flip changes from medium to wide distribution. Medium distribution (70°, 1.01 SC) Wide distribution (107°, 1.61 SC)	**Field Selectable** **8FS** = 80 CRI (minimum) with field selectable 3000K, 3500K and 4000K CCT (nominal). Factory pre-set for 3500K. **9FS** = 90 CRI (minimum) with field selectable 3000K, 3500K and 4000K CCT (nominal). Factory pre-set for 3500K. **Discrete (fixed) Factory Set** **827** = 80 CRI (minimum) 2700K **927** = 90 CRI (minimum) 2700K **850** = 80 CRI (minimum) 5000K **950** = 90 CRI (minimum) 5000K	**MW** = matte white ring/ self-flanged reflector **MMS** = matte metallic silver ring/self-flanged reflector **BZ** = bronze ring/self-flanged reflector	**PR4WW** = 4" wall wash optic, field installed **PR4MDWD** = 4" reversible medium / wide distribution - replacement lens
Notes	**Notes**	**Notes**	**Notes**	**Notes**	**Notes**

Product Specifications

Housing
- One piece spun aluminum gasketed surface mount housing cylinders
- Available in matte white, matte metallic silver and dark bronze finishes
- May be used for new construction or renovation work

Universal Mounting Bracket
- Provided with mounting pattern for direct ceiling installation to most 3-1/2" round, and 4" round, octagon and square junction boxes (installer to confirm compatible hole pattern)

LED Module
- Integrated self-flanged reflector with multiple finish options
- Patented SeleCCTable™ color temperature technology and selectable lumen output for selection in the field
- Integrated dip switches for color and lumen selection
- Field Selectable CCT 3000K / 3500K / 4000K
- Discrete (Fixed) CCT options in 2700K and 5000K
- Low and high selectable lumen ranges:
  - Low Lumen: 1000/1500/2000lm (nominal)
  - High Lumen: 2000/3000/4000lm (nominal)
- Discrete (fixed) lumen models, use to meet lighting power density codes
  - Low Lumen: 1000lm and 1500lm
  - High Lumen: 3000lm (nominal)
- Available in 80 CRI or 90 CRI (nominal) with color accuracy within 3 SDCM
- LED array uses a plurality of mid-power surface mount LEDs delivering high flux and excellent efficiency.
- Passive cooling achieves L70 at 50,000 hours
- Integral connector for quick link to the driver

LED Module – Optics
- Reversible "Flip" Lens
  - "Flip" lens is reversible offering medium / wide beam options
  - Lens ships in medium beam. Twist-to-lock feature allows conversion to wide beam in the field without tools.
  - Micro-prismatic lens is precision molded optical polymer
- Louvered Wall Wash
  - Optional field installed wall wash kit offers 360° rotation, allowing the housing to be installed in any orientation.

LED Module - Reflector
- Integrated self-flanged reflector with LED array and lens
- Finish options: matte white, matte metallic silver, and dark bronze

LED Module - Retention
- Module/reflector is securely retained with (2) torsion springs holding the flange tightly to the housing

Driver
- Driver is preinstalled and prewired in the cylinder
- Field replaceable constant current driver provides low noise operation
- UNV 120-277VAC 50/60Hz input standard
- Continuous 1% - 100% dimming with analog controls

Compliance
- cULus Listed (US and Canada), wet location listed in protected ceilings
- IP65 - Below finished ceiling
- EMI/RFI emissions FCC CFR Title 47 Part 15 Class A at 120/277V
- Contains no mercury or lead and RoHS compliant
- Photometric testing in accordance of IES LM-79-08
- Lumen maintenance projections in accordance of IES LM-80-08 and TM-21-11
- May be used to comply with State of California Title 24 non-residential code, as a dimmable LED luminaire
- ENERGY STAR® certified, see Certified Light Fixtures database

Warranty
- Five year limited warranty, consult website for details. www.cooperlighting.com/legal

Photometric Data

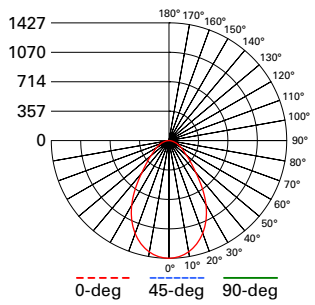

PR4SFS12D010 - PR4M12MD8FSMW

Low lumen module, 2000 lumen, medium lens

Spacing criterion: 1.01

Lumens: 2135

Input Watts: 19.8 W

Efficacy: 107.8 LPW

UGR: 21

Test Report: PR4FS12D010 PR4M12MD8FSMW 2000Lm3500K.ies

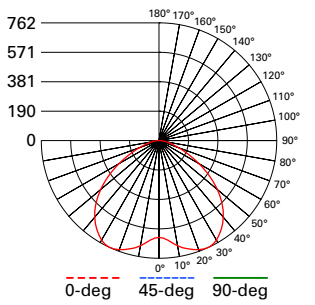

PR4SFS12D010 - PR4M12WD8FSMW

Low lumen module, 2000 lumen, wide lens

Spacing criterion: 1.61

Lumens: 2177

Input Watts: 19.8 W

Efficacy: 109.9 LPW

UGR: 24

Test Report: PR4FS12D010 PR4M12WD8FSMW 2000Lm3500K.ies

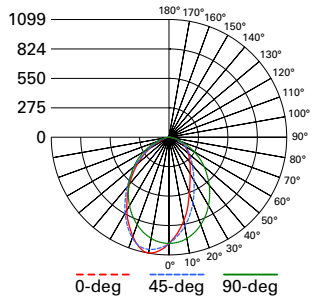

PR4SFS12D010 - PR4M12MD8FSMW - PR4WW

Low lumen module - wall wash, 2000 lumen, wall wash accessory

Spacing criterion: 1.12

Lumens: 1845

Input Watts: 19.8 W

Efficacy: 93.2 LPW

UGR: 23

Test Report: PR4FS12D010 PR4M12WW8FSMW 2000Lm3500K.ies

SINGLE UNIT FOOTCANDLES

	2.5′ from wall (distance from fixture along wall)						
1	15.8	12	6	2.5	1.1	0.5	0.2
2	17.2	14.3	8.8	4.7	2.4	1.2	0.7
3	12.8	11.3	8	5	2.9	1.7	1
4	8.9	8.1	6.3	4.4	2.9	1.9	1.2
5	6.3	5.9	4.9	3.7	2.6	1.8	1.2
6	4.6	4.3	3.8	3	2.3	1.7	1.2
7	3.4	3.3	2.9	2.4	2	1.5	1.1
8	2.6	2.5	2.3	2	1.6	1.3	1
9	2	2	1.8	1.6	1.4	1.1	0.9
10	1.6	1.6	1.5	1.3	1.1	1	0.8

MULTIPLE UNIT FOOTCANDLES

	2.5′ from wall (distance from fixture along wall) 3			2.5′ from wall (distance from fixture along wall) 4		
1	18.3	17.6	18.3	16.8	11.9	16.8
2	21.9	23.1	21.9	19.6	17.6	19.6
3	17.8	19.4	17.8	15.7	16	15.7
4	13.3	14.6	13.3	11.8	12.7	11.8
5	10	10.8	10	8.9	9.7	8.9
6	7.6	8.2	7.6	6.9	7.5	6.9
7	5.9	6.2	5.9	5.4	5.9	5.4
8	4.6	4.9	4.6	4.2	4.6	4.2
9	3.6	3.8	3.6	3.4	3.7	3.4
10	2.9	3	2.9	2.7	2.9	2.7

Photometric Multipliers - Selectable lumen 1000lm - 1500lm - 2000lm

1000 Lumen	1500 Lumen	2000 Lumen
0.47	0.62	1.00

Multipliers for nominal values with other series models

Color Finish Multipliers

Finish code	MW	MMS	BZ
Finish	Matte White	Matte Metallic Silver	Bronze
Multiplier	1.00	0.94	0.83

Multipliers for nominal values with other series models

CCT Multipliers – 80CRI - Selectable CCT 3000K - 3500K - 4000K

3000K	3500K	4000K
0.92	1.00	0.98

Multipliers for nominal values with other series models

CCT Multipliers – 90CRI - Selectable CCT 3000K - 3500K - 4000K

3000K	3500K	4000K
0.93	1.00	0.97

Multipliers for nominal values with other series models

Note: Refer to IES files for more product data.

Photometric Data

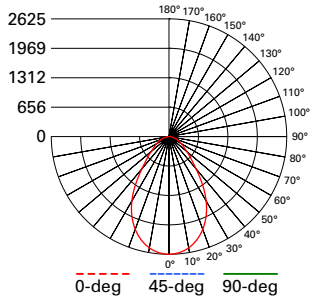

PR4SFS24D010 - PR4M24MD8FSMW

High lumen module, 4000 lumen, medium lens

Spacing criterion: 1.01

Lumens: 3927

Input Watts: 39 W

Efficacy: 100.7 LPW

UGR: 23

Test Report: PR4FS24D010 PR4M24MD8FSMW 4000Lm3500K.ies

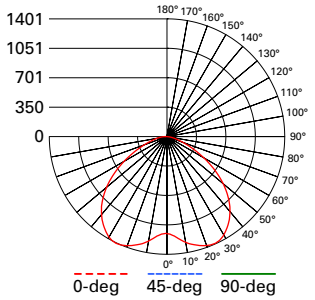

PR4SFS24D010 - PR4M24MD8FSMW

High lumen module, 4000 lumen, wide lens

Spacing criterion: 1.61

Lumens: 4004

Input Watts: 39 W

Efficacy: 102.7 LPW

UGR: 25

Test Report: PR4FS24D010 PR4M24WD8FSMW 4000Lm3500K.ies

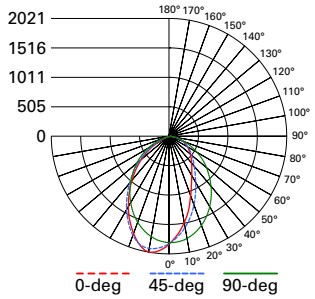

PR4SFS24D010 - PR4M24MD8FSMW - PR4WW

High lumen module - wall wash, 2000 lumen, wall wash accessory

Spacing criterion: 1.12

Lumens: 3394

Input Watts: 39 W

Efficacy: 87 LPW

UGR: 24

Test Report: PR4FS24D010 PR4M24WW8FSMW 4000Lm3500K.ies

SINGLE UNIT FOOTCANDLES

2.5′ from wall (distance from fixture along wall)							
1	29	22.1	10.9	4.6	2	0.8	0.4
2	31.7	26.3	16.2	8.6	4.4	2.3	1.2
3	23.5	20.7	14.7	9.2	5.4	3.2	1.8
4	16.4	14.9	11.6	8.1	5.4	3.4	2.2
5	11.6	10.8	9	6.8	4.8	3.3	2.3
6	8.4	8	6.9	5.5	4.2	3.1	2.2
7	6.3	6	5.4	4.5	3.6	2.8	2.1
8	4.8	4.7	4.2	3.6	3	2.4	1.9
9	3.7	3.6	3.4	3	2.5	2.1	1.7
10	2.9	2.9	2.7	2.4	2.1	1.8	1.5

MULTIPLE UNIT FOOTCANDLES

	2.5′ from wall (distance from fixture along wall) 3			2.5′ from wall (distance from fixture along wall) 4		
1	33.7	32.3	33.7	31	21.9	31
2	40.3	42.6	40.3	36.1	32.5	36.1
3	32.7	35.8	32.7	28.9	29.4	28.9
4	24.5	26.8	24.5	21.7	23.3	21.7
5	18.4	19.9	18.4	16.4	17.9	16.4
6	14	15.1	14	12.6	13.8	12.6
7	10.8	11.5	10.8	9.9	10.8	9.9
8	8.4	8.9	8.4	7.8	8.5	7.8
9	6.7	7	6.7	6.3	6.7	6.3
10	5.4	5.6	5.4	5	5.4	5

Photometric Multipliers - Selectable lumen 2000lm-3000lm-4000lm

2000 Lumen	3000 Lumen	4000 Lumen
0.53	0.70	1.00

Multipliers for nominal values with other series models

Color Finish Multipliers

Finish code	MW	MMS	BZ
Finish	Matte White	Matte Metallic Silver	Bronze
Multiplier	1.00	0.94	0.83

Multipliers for nominal values with other series models

CCT Multipliers – 80CRI - Selectable CCT 3000K - 3500K - 4000K

3000K	3500K	4000K
0.90	1.00	0.96

Multipliers for nominal values with other series models

CCT Multipliers – 90CRI - Selectable CCT 3000K - 3500K - 4000K

3000K	3500K	4000K
0.91	1.00	0.95

Multipliers for nominal values with other series models

Note: Refer to IES files for more product data.

Energy and Performance Data

COLOR METRICS - TM-30-15 & CRI/CIE (3500K)

80 CRI & 90 CRI Color Metric Summary - Low Lumen / 3500K*

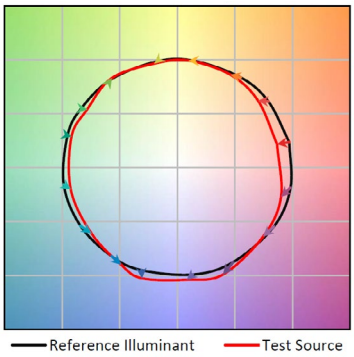

80 CRI

TM-30-15	Rf = 82
	Rg = 94
CRI/CIE	Ra = 83
	R9 = 11

90 CRI

TM-30-15	Rf = 90
	Rg = 98
CRI/CIE	Ra = 95
	R9 = 77

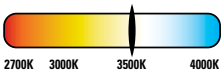

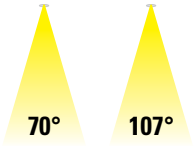

80 CRI & 90 CRI Color Metric Summary - High Lumen / 3500K*

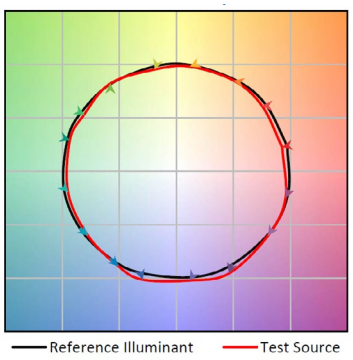

80 CRI

TM-30-15	Rf = 82
	Rg = 94
CRI/CIE	Ra = 83
	R9 = 10

90 CRI

TM-30-15	Rf = 90
	Rg = 98
CRI/CIE	Ra = 94
	R9 = 74

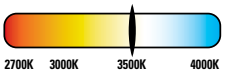

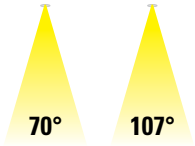

PR4FS12 LED MODULE LOW LUMEN RANGE

Series	1000 lumen	
Input Voltage 120-277VAC	120V	277V
Input Current (A)	0.089	0.043
Input Power (W)	10.5	11
In-rush (A)	8.9	22.2
In-rush Duration (ms)	0.145	0.118
THD (%)	<15.1	<16.7
PF	≥ 0.98	≥ 0.92
Minimum starting temperature -20°C (-4°F)		
Sound Rating: Class A standards		

Series	1500 lumen	
Input Voltage 120-277VAC	120V	277V
Input Current (A)	0.112	0.052
Input Power (W)	13.4	13.8
In-rush (A)	9.9	24.8
In-rush Duration (ms)	0.198	0.107
THD (%)	<13.3	<15.5
PF	≥ 0.98	≥ 0.94
Minimum starting temperature -20°C (-4°F)		
Sound Rating: Class A standards		

Series	2000 lumen	
Input Voltage 120-277VAC	120V	277V
Input Current (A)	0.178	0.079
Input Power (W)	21.3	21.4
In-rush (A)	8	19.1
In-rush Duration (ms)	0.185	0.133
THD (%)	<8.2	<10.6
PF	≥ 0.99	≥ 0.97
Minimum starting temperature -20°C (-4°F)		
Sound Rating: Class A standards		

PR4FS24 LED MODULE HIGH LUMEN RANGE

Series	2000 lumen	
Input Voltage 120-277VAC	120V	277V
Input Current (A)	0.176	0.081
Input Power (W)	21	21.2
In-rush (A)	15.3	32.1
In-rush Duration (ms)	0.237	0.12
THD (%)	<11	<13.6
PF	≥ 0.99	≥ 0.94
Minimum starting temperature -20°C (-4°F)		
Sound Rating: Class A standards		

Series	3000 lumen	
Input Voltage 120-277VAC	120V	277V
Input Current (A)	0.225	0.101
Input Power (W)	26.9	27
In-rush (A)	11.6	27.9
In-rush Duration (ms)	0.187	0.081
THD (%)	<9.05	<11.8
PF	≥ 0.99	≥ 0.96
Minimum starting temperature -20°C (-4°F)		
Sound Rating: Class A standards		

Series	4000 lumen	
Input Voltage 120-277VAC	120V	277V
Input Current (A)	0.332	0.145
Input Power (W)	39.8	39.4
In-rush (A)	12.8	27.5
In-rush Duration (ms)	0.211	0.107
THD (%)	<5.9	<8.8
PF	≥ 0.99	≥ 0.98
Minimum starting temperature -20°C (-4°F)		
Sound Rating: Class A standards		

Dimensional Details

HIGH LUMEN

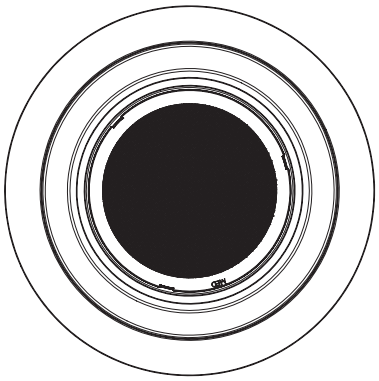

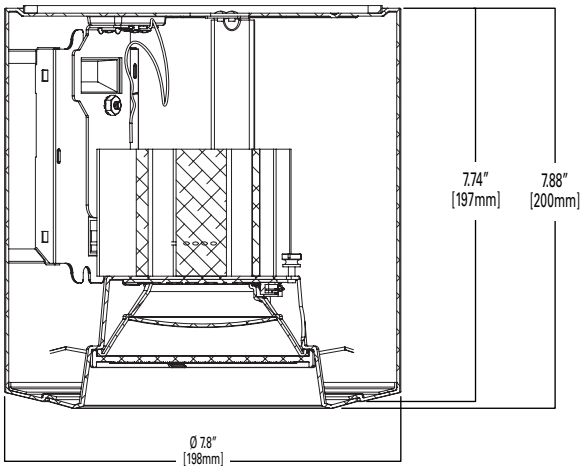

LOW LUMEN

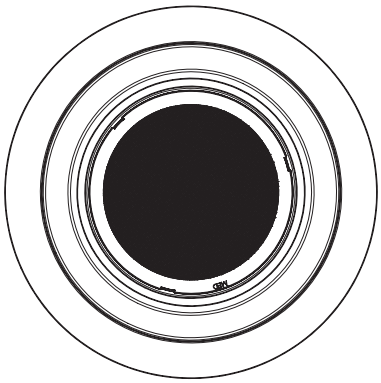

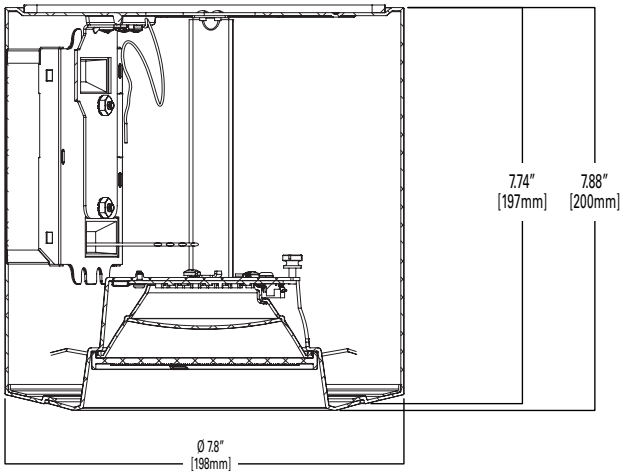

Cooper Lighting Solutions
1121 Highway 74 South
Peachtree City, GA 30269
P: 770-486-4800
www.cooperlighting.com

© 2020 Cooper Lighting Solutions
All Rights Reserved.

Specifications and dimensions
subject to change without notice.