Project		Catalog #		Type	
Prepared by		Notes		Date	



HALO Commercial

PR6R | PR6M

6-inch LED self-flanged, lensed retrofit downlight and wall wash

Typical Applications

Office • Healthcare • Hospitality • Institutional

Interactive Menu

- Order Information page 2
- Product Specifications page 3
- Photometric Data page 4
- Energy & Performance Data page 6
- Product Warranty

Product Certification

ENERGY STAR · Efficiency Standards T24 Can be used to comply with California Title 24 Non-Residential · FC · RoHS COMPLIANT · c UL us LISTED

Product Features

seleCCTable colors · selectable lumens

Top Product Features

- Selectable lumens 1000/1500/2000 and 2000/3000/4000
- SeleCCTable color temperature 3000K/3500K/4000K
- Available in 80 CRI or 90 CRI
- Medium/Wide beam distribution lens; Wall wash accessory kit
- Retrofit 6-inch nominal commercial open frames 5.75" to 7.5" (up to 7.625" with oversize trim ring accessory)

Dimensional and Mounting Details

HIGH LUMEN

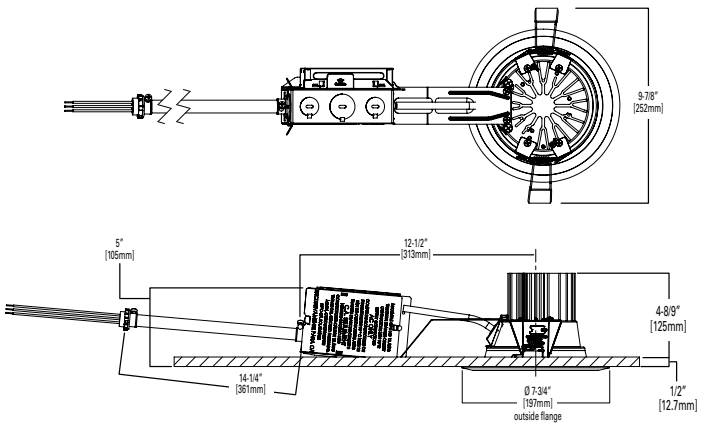

Scale

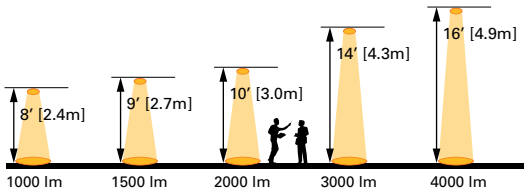

Nominal values for 15 - 20 footcandles at nadir.

additional product diagrams

Order Information

SAMPLE ORDER NUMBER: **PR6RFS24D010REM7 – PR6M24MD8FSMW**

Mounting Frame | Lumens | Input / Control | Factory Installed Options | Accessories

Standard Driver 120-277VAC, 0-10V analog dimming

Mounting Frame	Lumens	Input / Control	Factory Installed Options	Accessories
PR6R = 6" aperture retrofit kit frame arm with integrated junction box and driver **PR6RCP** = 6" aperture retrofit kit frame arm with integrated junction box and driver, CCEA Chicago Plenum rated	**Field Selectable** [4] **FS12** = field selectable 1000, 1500 and 2000 lumens (nominal), use with PR6M12* LED modules only **FS24** = field selectable 2000, 3000 and 4000 lumens (nominal), use with PR6M24* LED modules only **Discrete (fixed) Factory Set** [5] **10** = 1000 lumens (nominal), use with PR6M12* LED modules only **15** = 1500 lumens (nominal), use with PR6M12* LED modules onlys **30** = 3000 lumens (nominal), use with PR6M24* LED modules only	**D010** = 120-277VAC 50/60Hz, 0-10V analog , 1%-100% dimming	**REM7** = integral 7 watt emergency battery pack with remote test / indicator light, use with D010 only [1] **REM14** = integral 14 watt emergency battery pack with remote test / indicator light, use with D010 only [1] **BOD7ST** = 7.5 watt Bodine self-test diagnostic emergency module with remote test / indicator light, use with D010 only [1] **LWTPD1** = Enlighted factory installed wireless sensor kit, D010 only [1] **WTA** = Field installed WaveLinx Sensor Kit [1][3]	**H347** = 347 to 120V step down transformer, 75VA **H347200** = 347 to 120V step down transformer, 200VA **PORLWTPD1** = Enlighted wireless sensor kit, field installed, D010 only [1] **WTA** = Field installed WaveLinx Sensor Kit [1][3]
Notes	**Notes** (4) FS12 factory preset 2000 lumens in PR6M12 LED module. FS24 factory preset 4000 lumens in PR6M24 LED module. (5) Driver has fixed lumen output. Lumen selector switch on LED modules do not change lumens in fixed output housings.	**Notes**	**Notes** (1) Not available for Chicago Plenum (3) WTA = WaveLinx tile mount sensor kit for daylight dimming, PIR motion sensing, and optional RLTS - Real Time Location Services, use with D010 only (Refer to WaveLinx system specifications)	**Notes** (1) Not available for Chicago Plenum (3) WTA = WaveLinx tile mount sensor kit for daylight dimming, PIR motion sensing, and optional RLTS - Real Time Location Services, use with D010 only (Refer to WaveLinx system specifications)

Mounting Frame | Lumens | Input / Control | Factory Installed Options

DLV Driver Distributed Low Voltage Power System

Mounting Frame	Lumens[5]	Input / Control	Factory Installed Options
PR6R = 6" aperture retrofit frame arm with integrated junction box and low voltage DLVP system driver	**10** = 1000 lumens (nominal), use with PR6M12* LED modules only **15** = 1500 lumens (nominal), use with PR6M12* LED modules only **20** = 2000 lumens (nominal), use with PR6M12* LED modules or with PR6M24* LED modules **30** = 3000 lumens (nominal), use with PR6M24* LED modules only **40** = 4000 lumens (nominal), use with PR6M24* LED modules only	**DLV** = distributed low voltage dimming driver (1%-100%) For use with DLVP system. Refer to DLVP low-voltage power module and DLVP specifications for details. [1]	**REMV7** = 7 watt emergency battery pack with remote test / indicator light, use with DLV only [1][2]) **REMV14** = 14 watt emergency battery pack with remote test / indicator light, use with DLV only [1][2]
Notes	**Notes** (5) Driver has fixed lumen output. Lumen selector switch on LED modules do not change lumens in fixed output housings.	**Notes** (1) Not available for Chicago Plenum	**Notes** (1) Not available for Chicago Plenum (2) ULus for U.S. only

LED Module | Lumen Range | Distribution | CRI / CCT | Finish | Accessories

LED Module	Lumen Range	Distribution	CRI / CCT	Finish	Accessories
PR6M = 6" aperture LED module and self-flanged reflector	**12** = field selectable 1000, 1500 and 2000 lumens (nominal). Factory pre-set for 2000 lumens. Use with PR612*, PR610*, PR615*, PR620* mounting frames only. **24** = field selectable 2000, 3000 and 4000 lumens (nominal). Factory pre-set for 4000 lumens. Use with PR624*, PR620*, PR630*, PR640* mounting frames only.	**MD** = Medium distribution lens - factory installed (60°,1.2 SC) Included: Wide distribution lens – field interchangeable option (65°, 1.3 SC)	**Field Selectable** **8FS** = 80 CRI (minimum) with field selectable 3000K, 3500K and 4000K CCT (nominal). Factory pre-set for 3500K. **9FS** = 90 CRI (minimum) with field selectable 3000K, 3500K and 4000K CCT (nominal). Factory pre-set for 3500K. **Discrete (fixed) Factory Set** **827** = 80 CRI (minimum) 2700K **927** = 90 CRI (minimum) 2700K **850** = 80 CRI (minimum) 5000K **950** = 90 CRI (minimum) 5000K	**MW** = matte white ring/ self-flanged reflector **MMS** = matte metallic silver ring/self-flanged reflector **BZ** = bronze ring/self-flanged reflector	**PR6WW** = 6" wall wash optic, field installed **OT400P** = Oversize matte white trim ring 5-7/8" ID opening, 9-1/2" OD flange. Use when retrofitting up to 7-5/8" ceiling cutout of an existing housing.
Notes	**Notes**	**Notes**	**Notes**	**Notes**	**Notes**

Product Specifications

Retrofit Frame Arm
- Die-formed galvanized steel retrofit frame arm with integrated junction box
- One-piece construction attaches to LED module for installation in an existing commercial downlight from below the finished ceiling
- UL listed with Cooper Lighting Solutions commercial frames, and classified with others frames (Installer is responsible to determine retrofit compatibility and proper conditions of use including but not limited to local and national electrical codes)

Mounting
- Retrofit frame arm attaches to the LED module with knurled thumb screws

LED Module
- Integrated self-flanged shallow reflector with multiple finish options
- Patented SeleCCTable™ color temperature technology and selectable lumen output for selection in the field
- Integrated dip switches for selectable color and lumen selection in the field
- Selectable CCT 3000K/3500K/4000K
- Selectable low and high lumen ranges:
  - Low Lumen: 1000lm, 1500lm, 2000m (nominal)
  - High Lumen: 2000lm, 3000lm, 4000lm (nominal)
- Discrete (fixed) lumen models in 1000lm, 1500lm, 3000lm (nominal); use to meet lighting power density codes
- Available in 80 CRI or 90 CRI (nominal) with color accuracy within 3 SDCM
- LED array uses a plurality of mid-power surface mount LEDs delivering high flux and excellent efficiency
- Passive cooling achieves L70 at 50,000 hours
- Integral connector for quick link to the housing flex

LED Module – Optics
- Medium / wide beam lens included
- Lens ships in medium beam. Twist-to-lock feature allows conversion to wide beam in the field without tools.
- Micro-prismatic lens is precision formed optical polymer
- **Louvered Wall Wash**
  - Optional field installed wall wash kit offers 360° rotation, allowing the housing to be installed in any orientation.

LED Module - Reflector
- Integrated self-flanged shallow reflector with LED array and lens
- Finish paint options: matte white, matte metallic silver, and dark bronze

LED Module - Retention
- Module is retained with two butterfly springs that hold the flange tightly to the finished ceiling surface
- Butterfly springs included with retrofit frame arm kit, for field installation on LED module in place of torsion springs

Driver
- Driver is preinstalled and prewired to the junction box on the retrofit frame arm
- Field replaceable constant current driver provides low noise operation
- UNV 120-277VAC 50/60Hz input standard
- Continuous 1% - 100% dimming with 0-10V analog controls
- Optional "DLV" low voltage DC driver for use with DLVP distributed low voltage power system (see DLVP Design Guide / Brochure)

Emergency Option
- Available with 7W or 14W emergency battery pack with remote test switch / charge indicator light
- Provides 90 minutes of standby lighting meeting most life safety codes for egress

Connected Lighting System Options
- WaveLinx - Two WaveLinx options:
  - Factory installed WaveLinx tile mount sensor kit
  - Field installed WaveLinx accessory tile mount sensor kit.
- The WTA WaveLinx tile mount sensor kit offers daylight dimming, PIR motion sensing control, and optional RLTS - Real Time Location Services available. (Refer to WaveLinx system specifications and application guides for details) The WTA WaveLinx kit includes control module that mounts on the luminaire electrical junction box via 1/2" knock-out, and tilemount sensor with direct-mount spring clips or for octagon ceiling box with included mounting bracket. (Field mount kit ordered and installed separately).
- Enlighted wireless tile mount sensor and control kit

Junction Box
- Galvanized steel junction box
- 20in^3 internal volume excluding voltage barrier
- 25 in^3 internal total volume
- Voltage divider for 0-10V dimming wires [occupies (1) 1/2" pry-out space]
- Listed for (8) #12 AWG (four in, four out) 90˚ C conductors and feed-thru branch wiring
- (3) 1/2" and (2) 3/4" trade size pry-outs available
- (3) 4-port push wire nuts for mains voltage, with 1-port for fixture connection

Compliance
- cULus Listed/Classified; wet location listed in protected ceilings
- IP20 - Above finished ceiling;
  IP64 - Below finished ceiling
- Field selectable 1000/1500/2000 lm and 2000/3000/4000 lm models are Non-IC rated, insulation must be kept 3" from top and sides
- Fixed output (non-selectable) 1000 and 1500 lm models are Type IC thermally protected and suitable for direct contact to air permeable insulation (also suitable for Non-IC)
- Not for use in direct contact with spray foam insulation, consult NEMA LSD57-2013
- Airtight per ASTM-E283-04
- Suitable for use in clothes closets when installed in accordance of the NEC 410.16 spacing requirements
- EMI/RFI emissions FCC CFR Title 47 Part 15 Class A at 120/277V
- Contains no mercury or lead and RoHS compliant
- Photometric testing in accordance of IES LM-79-08
- Lumen maintenance projections per IES LM-80-08 and TM-21-11
- Field selectable 1000/1500/2000lm and 2000/3000/4000lm models may be used for California Title 24 non-residential compliance, as a dimmable LED luminaire
- Fixed output 1000lm and 1500lm 90 CRI, Type IC models may also be used for California Title 24 Residential compliance
- ENERGY STAR® certified, see Certified Light Fixtures database

Warranty
- Five year limited warranty, consult website for details. www.cooperlighting.com/legal

Photometric Data

View IES files

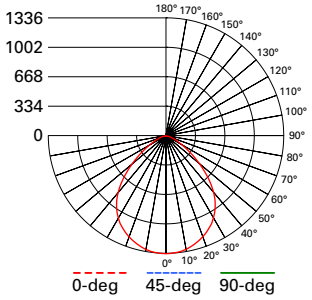

PR6RFS12D010 - PR6M12MD8FSMW

Low lumen module, 2000 lumen, medium lens

Spacing criterion: (II) 1.2 x

Lumens: 2703

Input Watts: 20.4 W

Efficacy: 132.5 LPW

UGR: 21

Test Report: PR6FS12D010 PR6M12MD8FSMW 2000Lm3500K.ies

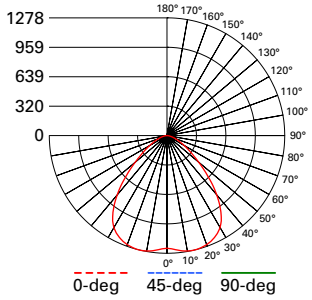

PR6RFS12D010 - PR6M12MD8FSMW

Low lumen module, 2000 lumen, wide lens

Spacing criterion: (II) 1.33 x

Lumens: 2674

Input Watts: 20.4 W

Efficacy: 131.1 LPW

UGR: 21

Test Report: PR6FS12D010 PR6M12WD8FSMW 2000Lm3500K.ies

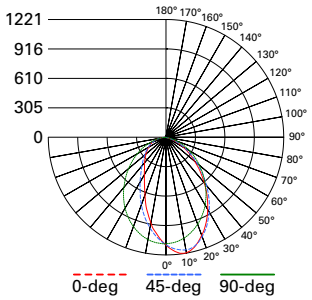

PR6RFS12D010 - PR6M12MD8FSMW - PR6WW

Low lumen module - wall wash, 2000 lumen, wall wash accessory

Spacing criterion: (II) 1.13 x

Lumens: 2079

Input Watts: 20.4 W

Efficacy: 101.9 LPW

UGR: 19

Test Report: PR6FS12D010 PR6M12WW8FSMW 2000Lm3500K.ies

SINGLE UNIT FOOTCANDLES

	2.5' from wall (distance from fixture along wall)						
1	17.2	12.6	6.1	2.6	1.1	0.5	0.2
2	30.4	24.2	13.7	6.8	3.4	1.7	0.9
3	27.5	23.4	15.3	8.7	4.8	2.7	1.5
4	20	17.9	13.2	8.5	5.2	3.1	1.9
5	13.8	12.8	10.2	7.2	4.8	3.2	2.1
6	9.6	9	7.6	5.8	4.2	2.9	2
7	6.7	6.4	5.6	4.6	3.5	2.6	1.9
8	4.9	4.7	4.2	3.6	2.9	2.2	1.7
9	3.6	3.5	3.2	2.8	2.3	1.9	1.5
10	2.7	2.7	2.5	2.2	1.9	1.6	1.3

MULTIPLE UNIT FOOTCANDLES

	2.5' from wall (distance from fixture along wall) 3			2.5' from wall (distance from fixture along wall) 4		
1	19.8	18.2	19.8	18.3	12.2	18.3
2	37.2	37.9	37.2	33.7	27.4	33.7
3	36.2	38.9	36.2	32.3	30.6	32.3
4	28.5	31.4	28.5	25.2	26.3	25.2
5	21.1	23.2	21.1	18.7	20.3	18.7
6	15.4	16.7	15.4	13.8	15.2	13.8
7	11.3	12.2	11.3	10.2	11.3	10.2
8	8.4	9	8.4	7.7	8.4	7.7
9	6.4	6.7	6.4	5.9	6.4	5.9
10	4.9	5.1	4.9	4.6	4.9	4.6

Photometric Multipliers - Selectable lumen 1000lm - 1500lm - 2000lm

1000 Lumen	1500 Lumen	2000 Lumen
0.51	0.65	1.00

Multipliers for nominal values with other series models

Color Finish Multipliers

Finish code	MW	MMS	BZ
Finish	Matte White	Matte Metallic Silver	Bronze
Multiplier	1.00	0.93	0.88

Multipliers for nominal values with other series models

CCT Multipliers – 80CRI - Selectable CCT 3000K - 3500K - 4000K

3000K	3500K	4000K
0.88	1.00	0.96

Multipliers for nominal values with other series models

CCT Multipliers – 90CRI - Selectable CCT 3000K - 3500K - 4000K

3000K	3500K	4000K
0.76	0.76	0.74

Multipliers for nominal values with other series models

Note: Refer to IES files for more product data.

Photometric Data

View IES files

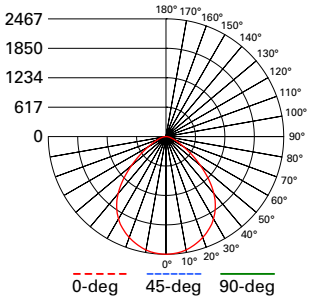

PR6RFS24D010 - PR6M24MD8FSMW

High lumen module, 4000 lumen, medium lens

Spacing criterion: (II) 1.2 x

Lumens: 4993

Input Watts: 39 W

Efficacy: 128 LPW

UGR: 23

Test Report: PR6FS24D010 PR6M24MD8FSMW 4000Lm3500K.ies

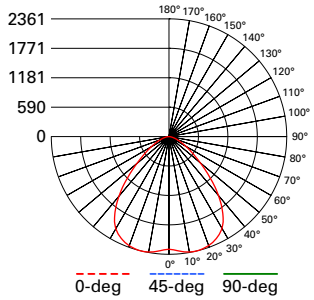

PR6RFS24D010 - PR6M24MD8FSMW

High lumen module, 4000 lumen, wide lens

Spacing criterion: (II) 1.33 x

Lumens: 4940

Input Watts: 39 W

Efficacy: 126.7 LPW

UGR: 23

Test Report: PR6FS24D010 PR6M24WD8FSMW 4000Lm3500K.ies

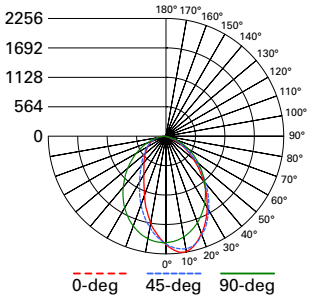

PR6RFS24D010 - PR6M24MD8FSMW - PR6WW

High lumen module - wall wash, 2000 lumen, wall wash accessory

Spacing criterion: (II) 1.13 x

Lumens: 3841

Input Watts: 39 W

Efficacy: 98.5 LPW

UGR: 21

Test Report: PR6FS24D010 PR6M24WW8FSMW 4000Lm3500K.ies

SINGLE UNIT FOOTCANDLES

	2.5' from wall (distance from fixture along wall)						
1	31.7	23.3	11.3	4.8	2	0.9	0.4
2	56.1	44.8	25.3	12.6	6.2	3.1	1.6
3	50.7	43.2	28.3	16.1	8.9	4.9	2.8
4	37	33.1	24.3	15.7	9.6	5.8	3.5
5	25.6	23.6	18.8	13.4	9	5.9	3.8
6	17.7	16.6	14	10.8	7.8	5.4	3.8
7	12.4	11.9	10.4	8.4	6.5	4.8	3.5
8	9	8.7	7.8	6.6	5.3	4.1	3.1
9	6.7	6.4	5.9	5.1	4.3	3.5	2.7
10	5	4.9	4.6	4	3.5	2.9	2.4

MULTIPLE UNIT FOOTCANDLES

	2.5' from wall (distance from fixture along wall) 3			2.5' from wall (distance from fixture along wall) 4		
1	36.5	33.6	36.5	33.7	22.5	33.7
2	68.8	70	68.8	62.3	50.7	62.3
3	66.9	71.8	66.9	59.6	56.6	59.6
4	52.7	58	52.7	46.6	48.6	46.6
5	39	42.8	39	34.5	37.6	34.5
6	28.4	30.9	28.4	25.5	28	25.5
7	20.8	22.5	20.8	18.9	20.8	18.9
8	15.6	16.6	15.6	14.3	15.6	14.3
9	11.8	12.4	11.8	10.9	11.8	10.9
10	9.1	9.5	9.1	8.5	9.1	8.5

Photometric Multipliers - Selectable lumen 2000lm-3000lm-4000lm

2000 Lumen	3000 Lumen	4000 Lumen
0.54	0.69	1.00

Multipliers for nominal values with other series models

Color Finish Multipliers

Finish code	MW	MMS	BZ
Finish	Matte White	Matte Metallic Silver	Bronze
Multiplier	1.00	0.93	0.88

Multipliers for nominal values with other series models

CCT Multipliers – 80CRI - Selectable CCT 3000K - 3500K - 4000K

3000K	3500K	4000K
0.89	1.00	0.95

Multipliers for nominal values with other series models

CCT Multipliers – 90CRI - Selectable CCT 3000K - 3500K - 4000K

3000K	3500K	4000K
0.77	0.83	0.75

Multipliers for nominal values with other series models

Note: Refer to IES files for more product data.

Energy and Performance Data

COLOR METRICS - TM-30-15 & CRI/CIE (3500K)

80 CRI Color Metric Summary - 3500K*

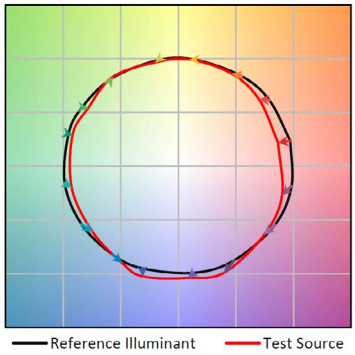

TM-30-15	Rf = 78.2
	Rg = 93.8
CRI/CIE	Ra = 78.4
	R9 = -4.5

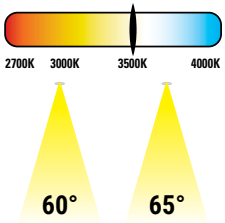

90 CRI Color Metric Summary - 3500K*

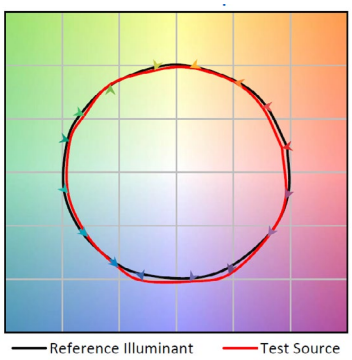

TM-30-15	Rf = 90.9
	Rg = 98.6
CRI/CIE	Ra = 96.6
	R9 = 91.5

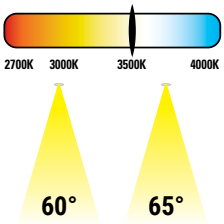

PR6FS12 LED MODULE LOW LUMEN RANGE

Series	1000 lumen	
Input Voltage 120-277VAC	120V	277V
Input Current (A)	0.089	0.043
Input Power (W)	10.5	11
In-rush (A)	8.9	22.2
In-rush Duration (ms)	0.145	0.118
THD (%)	<15.1	<16.7
PF	≥ 0.98	≥ 0.92
Minimum starting temperature -20°C (-4°F)*		
Sound Rating: Class A standards		

Series	1500 lumen	
Input Voltage 120-277VAC	120V	277V
Input Current (A)	0.112	0.052
Input Power (W)	13.4	13.8
In-rush (A)	9.9	24.8
In-rush Duration (ms)	0.198	0.107
THD (%)	<13.3	<15.5
PF	≥ 0.98	≥ 0.94
Minimum starting temperature -20°C (-4°F)*		
Sound Rating: Class A standards		

Series	2000 lumen	
Input Voltage 120-277VAC	120V	277V
Input Current (A)	0.178	0.079
Input Power (W)	21.3	21.4
In-rush (A)	8	19.1
In-rush Duration (ms)	0.185	0.133
THD (%)	<8.2	<10.6
PF	≥ 0.99	≥ 0.97
Minimum starting temperature -20°C (-4°F)*		
Sound Rating: Class A standards		

PR6FS24 LED MODULE HIGH LUMEN RANGE

Series	2000 lumen	
Input Voltage 120-277VAC	120V	277V
Input Current (A)	0.176	0.081
Input Power (W)	21	21.2
In-rush (A)	15.3	32.1
In-rush Duration (ms)	0.237	0.12
THD (%)	<11	<13.6
PF	≥ 0.99	≥ 0.94
Minimum starting temperature -20°C (-4°F)*		
Sound Rating: Class A standards		

Series	3000 lumen	
Input Voltage 120-277VAC	120V	277V
Input Current (A)	0.225	0.101
Input Power (W)	26.9	27
In-rush (A)	11.6	27.9
In-rush Duration (ms)	0.187	0.081
THD (%)	<9.05	<11.8
PF	≥ 0.99	≥ 0.96
Minimum starting temperature -20°C (-4°F)*		
Sound Rating: Class A standards		

Series	4000 lumen	
Input Voltage 120-277VAC	120V	277V
Input Current (A)	0.332	0.145
Input Power (W)	39.8	39.4
In-rush (A)	12.8	27.5
In-rush Duration (ms)	0.211	0.107
THD (%)	<5.9	<8.8
PF	≥ 0.99	≥ 0.98
Minimum starting temperature -20°C (-4°F)*		
Sound Rating: Class A standards		

Notes:
* Emergency Battery packs are rated for a minimum starting temperature of 0°C.

Dimensional Details

HIGH LUMEN

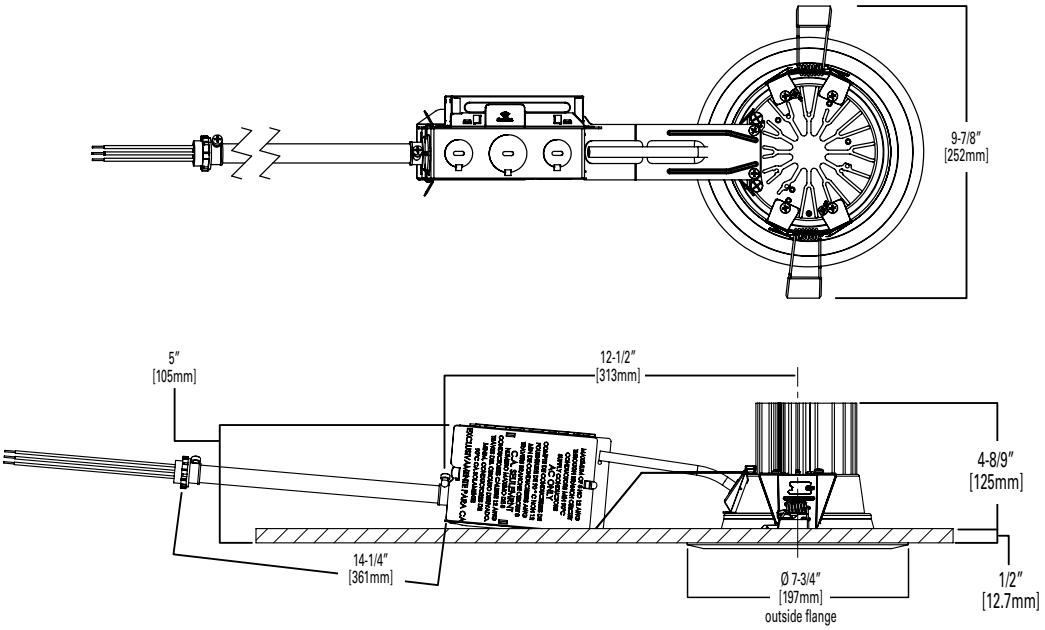

LOW LUMEN

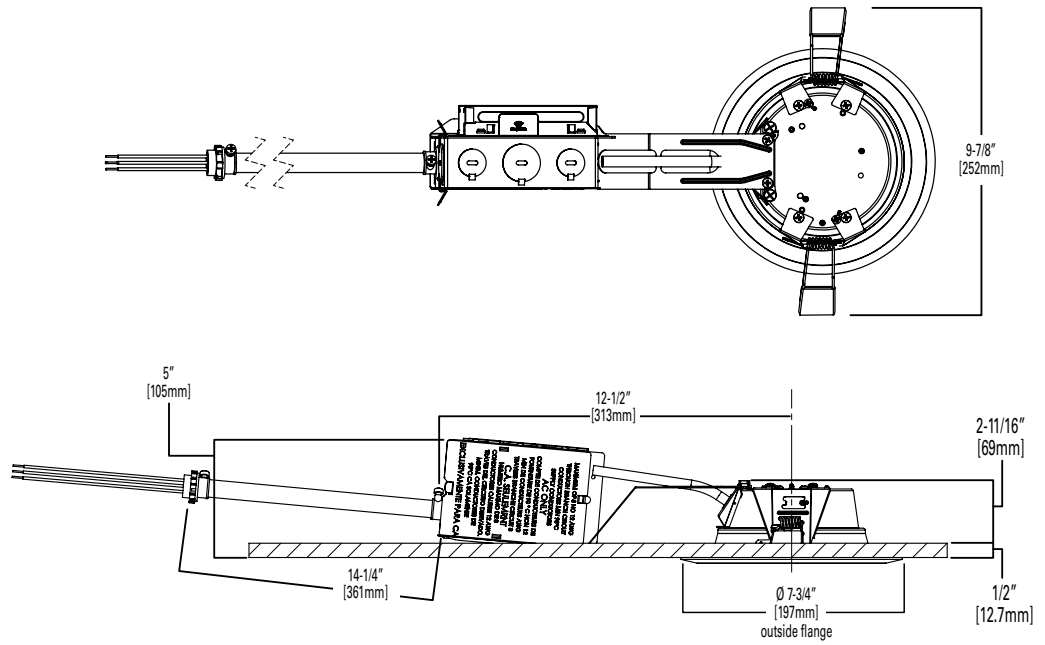

Cooper Lighting Solutions
1121 Highway 74 South
Peachtree City, GA 30269
P: 770-486-4800
www.cooperlighting.com

© 2020 Cooper Lighting Solutions
All Rights Reserved.

Specifications and dimensions
subject to change without notice.