PR6
6-inch Selectable LED Downlight

HALO Commercial

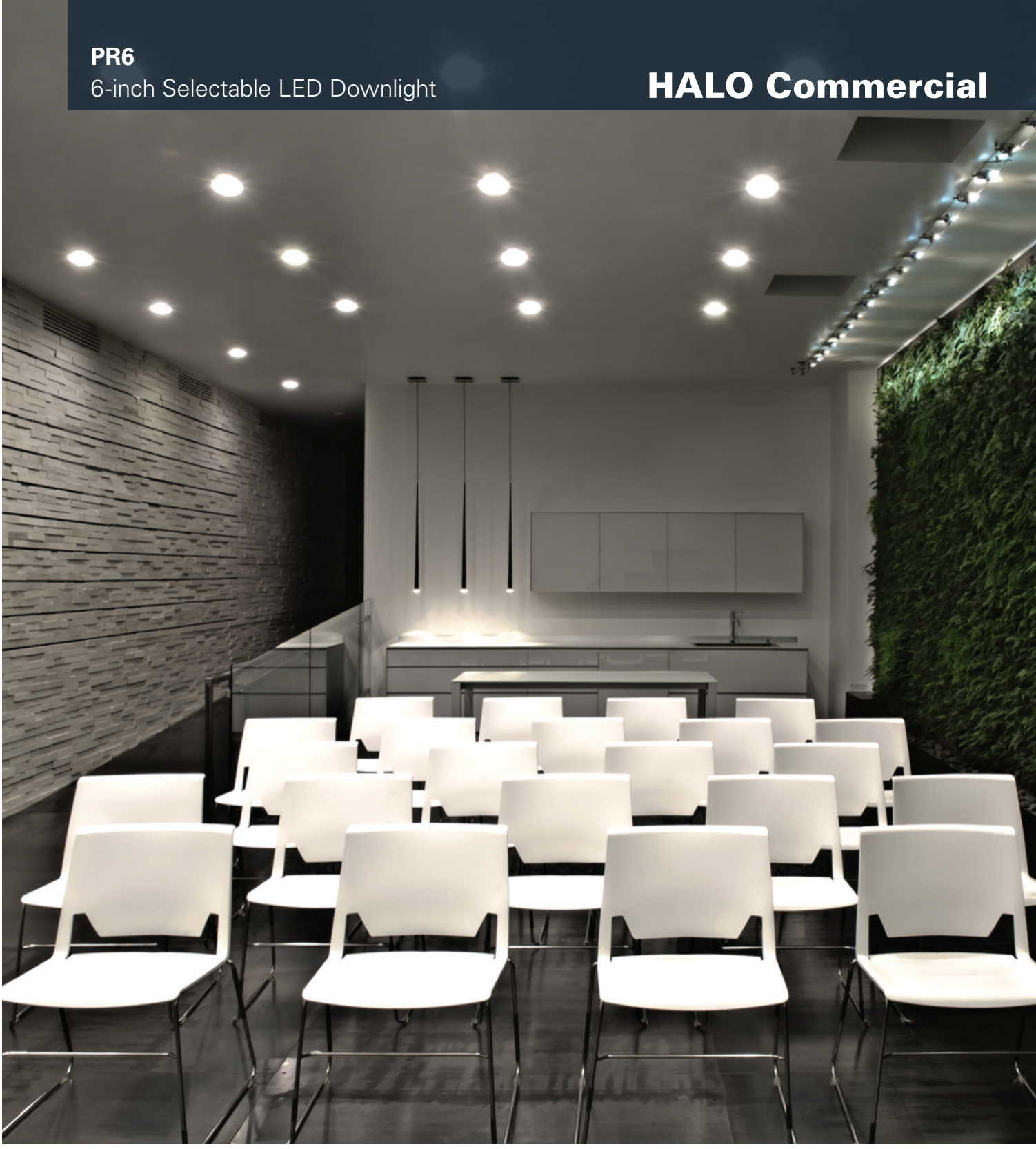

Powering Business Worldwide

PR6



6-inch Selectable LED
Downlight / Retrofit / Surface

The PR6 series offers ultimate flexibility... an all-inclusive utility downlight.

Selectable CCT - select between 3000K / 3500K / 4000K

Selectable lumen - select low or high lumen range

Low lumen: 1000 / 1500 / 2000 lumen

High lumen: 2000 / 3000 / 4000 lumen

Interchangeable lens optics - choose Medium or Wide beam optics (included)

New construction / Remodeler - frame coverts from new to remodeler with bar brackets removed

Retrofit - update old work with a LED retrofit (apertures from 5-3/4" to 7-1/2")

Surface - cylinder drums in low lumen and high lumen profiles

Selectable technology puts flexibility at your fingertips.

Dip switch selection settings for color temperature & lumens

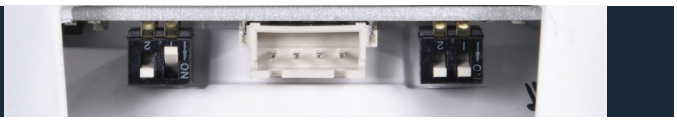

3 seleCCTable colors

Field SeleCCTable color temperature

SeleCCTable technology puts flexibility at your fingertips. By using switches located on the LED module, the user can choose from a range of three color temperatures 3000K, 3500K and 4000K.



selectable lumens

Field selectable lumens

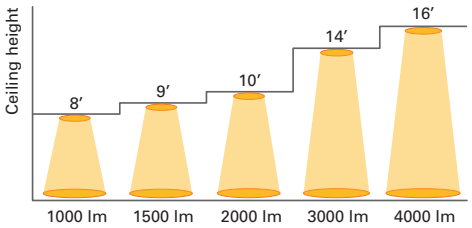

Nominal values for 15 - 20 footcandles at nadir.

PR6 Low Lumen Module			
4000K		2000 lm	
3500K (2 options)		1500 lm (2 options)	
3000K		1000 lm	
SeleCCTable Color		Selectable Lumen	

PR6 High Lumen Module			
4000K		4000 lm	
3500K (2 options)		3000 lm (2 options)	
3000K		2000 lm	
SeleCCTable Color		Selectable Lumen	





Energy Data

Nominal Lumens Model Number	1000 lumen PR6FS12		1500 lumen PR6FS12		2000 lumen PR6FS12		3000 lumen PR6FS24		4000 lumen PR6FS24		4000 lumen PR6FS24	
LED Module	Low Lumen Module						High Lumen Module					
Input Voltage 120-277VAC	120V	277V	120V	277V	120V	277V	120V	277V	120V	277V	120V	277V
Current (A)	0.089	0.043	0.112	0.052	0.178	0.079	0.176	0.081	0.225	0.101	0.332	0.145
Power (W)	10.5	11	13.4	13.8	21.3	21.4	21	21.2	26.9	27	39.8	39.4
In-rush (A)	8.9	22.2	9.9	24.8	8	19.1	15.3	32.1	11.6	27.9	12.8	27.5
In-rush Duration (ms)	0.145	0.118	0.198	0.107	0.185	0.133	0.237	0.12	0.187	0.081	0.211	0.107
THD (%)	<15.1	<16.7	<13.3	<15.5	<8.2	<10.6	<11	<13.6	<9.05	<11.8	<5.9	<8.8
PF ≥	≥ 0.98	≥ 0.92	≥ 0.98	≥ 0.94	≥ 0.99	≥ 0.97	≥ 0.99	≥ 0.94	≥ 0.99	≥ 0.96	≥ 0.99	≥ 0.98
Minimum starting temperature	-20°C (-4°F) Emergency battery option rated 0°C (32°F)											
Sound Rating	Class A standards											

Optical distributions

Field changeable lenses - medium and wide beam *(ships with medium installed, wide included)*







Finishes



White



Bronze



Silver

PR6 LED Downlight & Wall Wash



6-inch aperture LED downlight offered in medium, wide, and wall wash distributions ideal for general area lighting. Selectable lumen options range from 1000 to 4000 lumens and selectable color temperatures of 3000K / 3500K / 4000K, in 80 or 90 CRI. Luminaire is airtight and can be installed in new construction or from below the finished ceiling in remodeling applications. Intended for healthcare, hospitality, convenience retail, and institutional spaces.

Order Information

Sample Number: PR6FS24D010REM7 – PR6M24MD8FSMW
A complete luminaire consists of a mounting frame and LED module (order separately)

Standard Driver 120-277VAC, 0-10V analog dimming

Mounting Frame	Lumens	Input / Control	Options	Accessories
PR6 = 6" aperture new construction / remodeler housing frame **PR6CP** = 6" aperture new construction / remodeler housing frame, CCEA Chicago Plenum rated	**Field Selectable** **FS12** = field selectable 1000, 1500 and 2000 lumens (nominal), use with PR6M12* LED modules only **FS24** = field selectable 2000, 3000 and 4000 lumens (nominal), use with PR6M24* LED modules only **Discrete (fixed) Factory Set** **10** = 1000 lumens (nominal), use with PR6M12* LED modules only **15** = 1500 lumens (nominal), use with PR6M12* LED modules onlys **30** = 3000 lumens (nominal), use with PR6M24* LED modules only	**D010** = 120-277VAC 50/60Hz, 0-10V analog , 1%-100% dimming	**REM7** = integral 7 watt emergency battery pack with remote test / indicator light, use with D010 only (1) **REM14** = integral 14 watt emergency battery pack with remote test / indicator light, use with D010 only (1) **LWTPD1** = LumaWatt Pro factory installed wireless sensor kit, D010 only (1) **SWPD1** = WaveLinx factory installed w/ tile mount sensor, control module, and cable, D010 only (1)	**HB128APK =** L-channel "No Fuss" hanger bar, 26", pair (replacement) **RMB22 =** Adjustable wood joist mounting bars, pair, extend 22" long **H347** = 347 to 120V step down transformer, 75VA **H347200** = 347 to 120V step down transformer, 200VA **PORLWTPD1** = LumaWatt Pro wireless sensor kit, field installed, D010 only (1) **TMSWPD1** = WaveLinx sensor kit, field installed, D010 only (1)
Notes	**Notes**	**Notes**	**Notes** (1) Not available for Chicago Plenum	**Notes** (1) Not available for Chicago Plenum

DLV Driver Distributed Low Voltage Power System

Mounting Frame	Lumens	Input / Control	Options	Accessories
PR6 = 6" aperture new construction / remodeler housing frame (1)	**10** = 1000 lumens (nominal), use with PR6M12* LED modules only **15** = 1500 lumens (nominal), use with PR6M12* LED modules only **20** = 2000 lumens (nominal), use with PR6M12* LED modules or with PR6M24* LED modules **30** = 3000 lumens (nominal), use with PR6M24* LED modules only **40** = 4000 lumens (nominal), use with PR6M24* LED modules only	**DLV** = distributed low voltage dimming driver (1%-100%) For use with Eaton's DLVP system. Refer to DLVP low-voltage power module and DLVP specifications for details. (1)	**REMV7** = 7 watt emergency battery pack with remote test / indicator light, use with DLV only (1)(2) **REMV14** = 14 watt emergency battery pack with remote test / indicator light, use with DLV only (1)(2)	**HB128APK =** L-channel "No Fuss" hanger bar, 26", pair (replacement) **RMB22 =** Adjustable wood joist mounting bars, pair, extend 22" long
Notes (1) Not available for Chicago Plenum	**Notes**	**Notes** (1) Not available for Chicago Plenum	**Notes** (1) Not available for Chicago Plenum (2) ULus for U.S. only	**Notes**

LED Module	Lumen Range	Distribution	CRI / CCT	Finish	Accessories
PR6M = 6" aperture LED module and self-flanged reflector	**12** = field selectable 1000, 1500 and 2000 lumens (nominal). Factory pre-set for 2000 lumens. Use with PR612*, PR610*, PR615*, PR620* mounting frames only. **24** = field selectable 2000, 3000 and 4000 lumens (nominal). Factory pre-set for 4000 lumens. Use with PR624*, PR620*, PR630*, PR640* mounting frames only.	**MD** = Medium distribution lens - factory installed (60°, 1.2 SC) Included: Wide distribution lens – field interchangeable option (65°, 1.3 SC)	**Field Selectable** **8FS** = 80 CRI (nominal) with field selectable 3000K, 3500K and 4000K CCT (nominal). Factory pre-set for 3500K. **9FS** = 90 CRI (nominal) with field selectable 3000K, 3500K and 4000K CCT (nominal). Factory pre-set for 3500K. **Discrete (fixed) Factory Set** **827** = 80 CRI (minimum) 2700K **927** = 90 CRI (minimum) 2700K **850** = 80 CRI (minimum) 5000K **950** = 90 CRI (minimum) 5000K	**MW** = matte white ring/self-flanged reflector **MMS** = matte metallic silver ring/self-flanged reflector **BZ** = bronze ring/self-flanged reflector	**PR6WW** = 6" wall wash optic, field installed **OT400P** = Oversize matte white trim ring 5-7/8" ID opening, 9-1/2" OD flange. Use when retrofitting up to 7-5/8" ceiling cutout of an existing housing.
Notes	**Notes**	**Notes**	**Notes**	**Notes**	**Notes**

PR6R LED Retrofit Downlight & Wall Wash

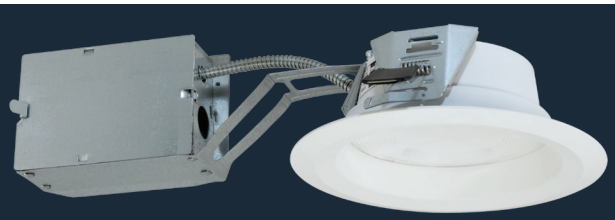

6-inch aperture LED retrofit downlight offered in medium, wide, and wall wash distributions ideal for general area lighting. Selectable lumen options range from 1000 to 4000 lumens and selectable color temperatures of 3000K / 3500K / 4000K, in 80 or 90 CRI. Luminaire is for installation from below the finished ceiling in retrofitting applicable existing open frame downlights (nominal apertures 5-3/4" to 7-1/2"). Intended for healthcare, hospitality, convenience retail, and institutional spaces.

Order Information

Sample Number: PR6RFS24D010REM7 – PR6M24MD8FSMW
A complete luminaire consists of a retrofit kit and LED module (order separately)

Standard Driver 120-277VAC, 0-10V analog dimming

Mounting Frame	Lumens	Input / Control	Options	Accessories
PR6R = 6" aperture retrofit kit frame arm with integrated junction box and driver **PR6RCP** = 6" aperture retrofit kit frame arm with integrated junction box and driver, CCEA Chicago Plenum rated	**Field Selectable** **FS12** = field selectable 1000, 1500 and 2000 lumens (nominal), use with PR6M12* LED modules only **FS24** = field selectable 2000, 3000 and 4000 lumens (nominal), use with PR6M24* LED modules only **Discrete (fixed) Factory Set** **10** = 1000 lumens (nominal), use with PR6M12* LED modules only **15** = 1500 lumens (nominal), use with PR6M12* LED modules onlys **30** = 3000 lumens (nominal), use with PR6M24* LED modules only	**D010** = 120-277VAC 50/60Hz, 0-10V analog , 1%-100% dimming	**REM7** = integral 7 watt emergency battery pack with remote test / indicator light, use with D010 only (1) **REM14** = integral 14 watt emergency battery pack with remote test / indicator light, use with D010 only (1) **LWTPD1** = LumaWatt Pro factory installed wireless sensor kit, D010 only (1) **SWPD1** = WaveLinx factory installed w/ tile mount sensor, control module, and cable, D010 only (1)	**H347** = 347 to 120V step down transformer, 75VA **H347200** = 347 to 120V step down transformer, 200VA **PORLWTPD1** = LumaWatt Pro wireless sensor kit, field installed, D010 only (1) **TMSWPD1** = WaveLinx sensor kit, field installed, D010 only (1)
Notes	**Notes**	**Notes**	**Notes** (1) Not available for Chicago Plenum	**Notes** (1) Not available for Chicago Plenum

DLV Driver Distributed Low Voltage Power System

Mounting Frame	Lumens	Input / Control	Options	Accessories
PR6R = 6" aperture retrofit frame arm with integrated junction box and low voltage DLVP system driver	**10** = 1000 lumens (nominal), use with PR6M12* LED modules only **15** = 1500 lumens (nominal), use with PR6M12* LED modules only **20** = 2000 lumens (nominal), use with PR6M12* LED modules or with PR6M24* LED modules **30** = 3000 lumens (nominal), use with PR6M24* LED modules only **40** = 4000 lumens (nominal), use with PR6M24* LED modules only	**DLV** = distributed low voltage dimming driver (1%-100%) For use with Eaton's DLVP system. Refer to DLVP low-voltage power module and DLVP specifications for details. (1)	**REMV7** = 7 watt emergency battery pack with remote test / indicator light, use with DLV only (1)(2) **REMV14** = 14 watt emergency battery pack with remote test / indicator light, use with DLV only (1)(2)	
Notes	**Notes**	**Notes** (1) Not available for Chicago Plenum	**Notes** (1) Not available for Chicago Plenum (2) ULus for U.S. only	**Notes**

LED Module	Lumen Range	Distribution	CRI / CCT	Finish	Accessories
PR6M = 6" aperture LED module and self-flanged reflector	**12** = field selectable 1000, 1500 and 2000 lumens (nominal). Factory pre-set for 2000 lumens. Use with PR612*, PR610*, PR615*, PR620* mounting frames only. **24** = field selectable 2000, 3000 and 4000 lumens (nominal). Factory pre-set for 4000 lumens. Use with PR624*, PR620*, PR630*, PR640* mounting frames only.	**MD** = Medium distribution lens - factory installed (60°,1.2 SC) Included: Wide distribution lens – field interchangeable option (65°, 1.3 SC)	**Field Selectable** **8FS** = 80 CRI (nominal) with field selectable 3000K, 3500K and 4000K CCT (nominal). Factory pre-set for 3500K. **9FS** = 90 CRI (nominal) with field selectable 3000K, 3500K and 4000K CCT (nominal). Factory pre-set for 3500K. **Discrete (fixed) Factory Set** **827** = 80 CRI (minimum) 2700K **927** = 90 CRI (minimum) 2700K **850** = 80 CRI (minimum) 5000K **950** = 90 CRI (minimum) 5000K	**MW** = matte white ring/ self-flanged reflector **MMS** = matte metallic silver ring/self-flanged reflector **BZ** = bronze ring/self-flanged reflector	**PR6WW** = 6" wall wash optic, field installed **OT400P** = Oversize matte white trim ring 5-7/8" ID opening, 9-1/2" OD flange. Use when retrofitting up to 7-5/8" ceiling cutout of an existing housing.
Notes	**Notes**	**Notes**	**Notes**	**Notes**	**Notes**



PR6S LED Surface Mount Cylinder

6-inch aperture LED surface mount cylinder drum for use with self-flanged lensed LED downlight offered in medium, wide, and wall wash distributions ideal for general area lighting. Selectable lumen options range from 1000 to 4000 lumens and selectable color temperatures of 3000K / 3500K / 4000K, in 80 or 90 CRI. Intended for healthcare, hospitality, convenience retail, and institutional spaces.

Order Information

Sample Number: PR6SFS24D010MW – PR6M24MD8FSMW
A complete luminaire consists of a surface mount cylinder and LED module (order separately)

Standard Driver 120-277VAC, 0-10V analog dimming

Mounting	Lumens	Input / Control	Finish	
PR6S = 6" aperture surface mount cylinder	**LOW LUMEN - SHALLOW CYLINDER** **Field Selectable** **FS12** = field selectable 1000, 1500 and 2000 lumens (nominal), use with PR6M12* LED modules only **Discrete (fixed) Factory Set** **10** = 1000 lumens (nominal), use with PR6M12* LED modules only **15** = 1500 lumens (nominal), use with PR6M12* LED modules onlys **HIGH LUMEN - DEEP CYLINDER** **Field Selectable** **FS24** = field selectable 2000, 3000 and 4000 lumens (nominal), use with PR6M24* LED modules only **Discrete (fixed) Factory Set** **30** = 3000 lumens (nominal), use with PR6M24* LED modules only	**D010** = 120-277VAC 50/60Hz, 0-10V analog , 1%-100% dimming	**MW** = matte white ring/self-flanged cylinder **MMS** = matte metallic silver ring/ self-flanged cylinder **BZ** = bronze ring/self-flanged cylinder	
Notes	**Notes**	**Notes**	**Notes**	**Notes**

LED Module	Lumen Range	Distribution	CRI / CCT	Finish	Accessories
PR6M = 6" aperture LED module and self-flanged reflector	**12** = field selectable low lumen range 1000, 1500 and 2000 lumens (nominal). Factory pre-set for 2000 lumens. Use with PR6SFS12*, PR6SFS10*, PR6SFS15* surface cylinders. **24** = field selectable high lumen range 2000, 3000 and 4000 lumens (nominal). Factory pre-set for 4000 lumens. Use with PR6SFS24*, PR6SFS30* surface cylinders.	**MD** = Medium distribution lens - factory installed (60°, 1.2 SC) Included: Wide distribution lens – field interchangeable option (65°, 1.3 SC)	**Field Selectable** **8FS** = 80 CRI (nominal) with field selectable 3000K, 3500K and 4000K CCT (nominal). Factory pre-set for 3500K. **9FS** = 90 CRI (nominal) with field selectable 3000K, 3500K and 4000K CCT (nominal). Factory pre-set for 3500K. **Discrete (fixed) Factory Set** **827** = 80 CRI (minimum) 2700K **927** = 90 CRI (minimum) 2700K **850** = 80 CRI (minimum) 5000K **950** = 90 CRI (minimum) 5000K	**MW** = matte white ring/ self-flanged reflector **MMS** = matte metallic silver ring/self-flanged reflector **BZ** = bronze ring/self-flanged reflector	**PR6WW** = 6" wall wash optic, field installed
Notes	**Notes**	**Notes**	**Notes**	**Notes**	**Notes**

Dimensions

PR6 LED Downlight & Wall Wash

LOW LUMEN

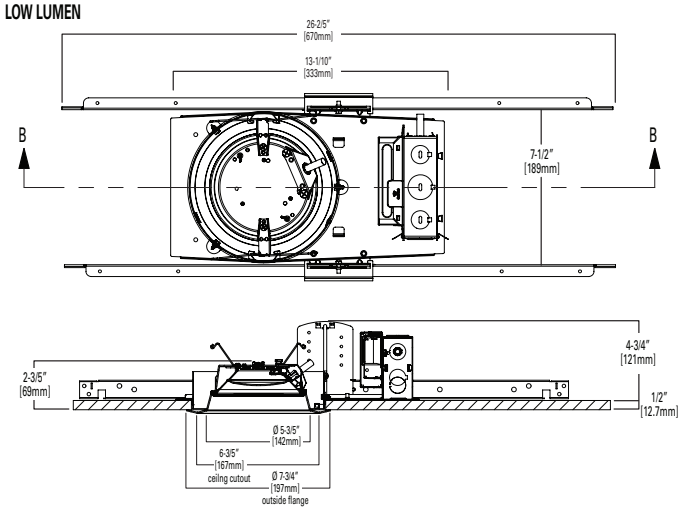

HIGH LUMEN

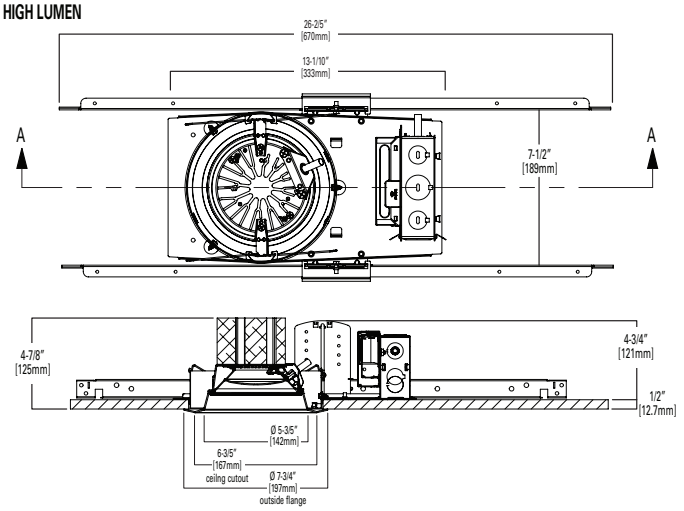

PR6R LED Retrofit Downlight & Wall Wash

LOW LUMEN

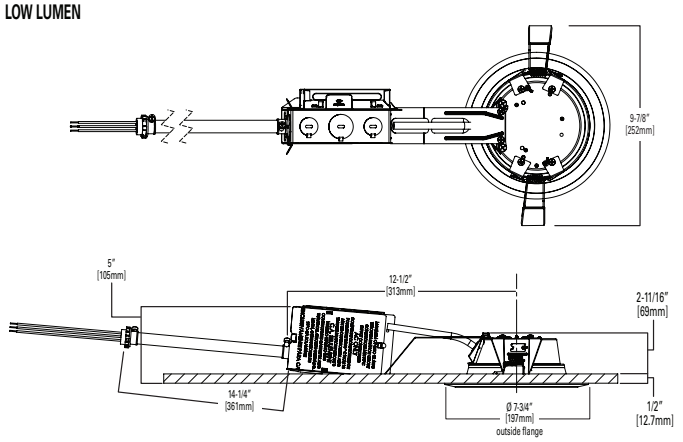

HIGH LUMEN

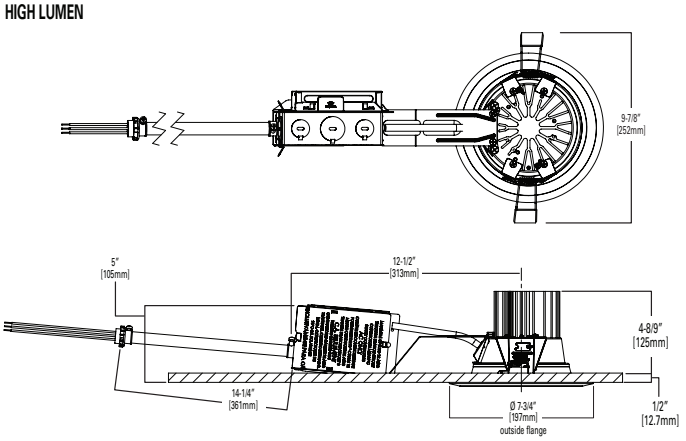

PR6S LED Surface Mount Cylinder Downlight and Wall Wash

LOW LUMEN

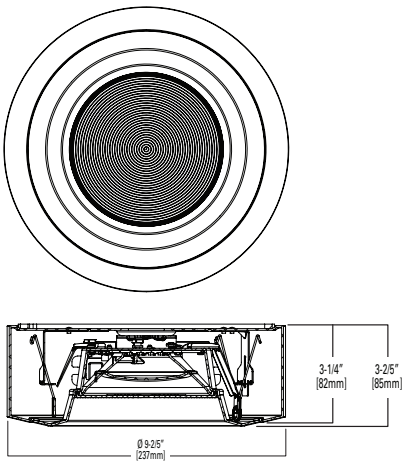

HIGH LUMEN

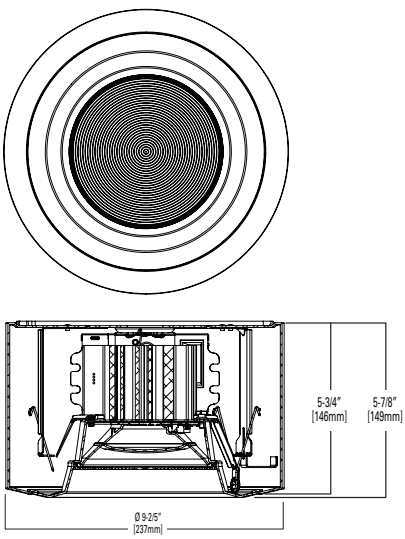

Our Lighting Product Lines

Ametrix
AtLite
Corelite
Ephesus
Fail-Safe
HALO
HALO Commercial
Invue
io
IRiS
Lumark
Lumière
McGraw-Edison
Metalux
MWS
Neo-Ray
Portfolio
RSA
Shaper
Streetworks
Sure-Lites

Our Controls Product Lines

Fifth Light Technology
Greengate
iLight (International Only)
iLumin
Zero 88

Connected Lighting Systems

Distributed Low-Voltage Power
HALO Home
iLumen Plus
LumaWatt Pro
WaveLinx

Powering Business Worldwide

Eaton
1121 Highway 74 South
Peachtree City, GA 30269
P: 770-486-4800
www.eaton.com/lighting

Canada Sales
5925 McLaughlin Road
Mississauga, Ontario L5R 1B8
P: 905-501-3000
F: 905-501-3172

© 2019 Eaton
All Rights Reserved
Printed in USA
Publication No. BR517011EN
August 15, 2019 2:58 PM

Eaton is a registered trademark.

All other trademarks are property of their respective owners.

Product availability, specifications, and compliances are subject to change without notice.