Table of Contents



Extra Heavy Duty Industrial GFCIs



Heavy Duty Commercial GFCIs



Portable GFCI Products



Product	Page
Hubbell Self Test GFCI Patented Technology	L-2
Extra Heavy Duty Industrial and Hospital Grade Tamper and Weather Resistant GFCI Receptacles	L-3
Heavy Duty Commercial Grade GFCI Receptacles	
Tamper-Resistant: • Nightlight, Alarm, Hospital Grade, Combination Switch/GFR and 3-Pack	L-4
Standard: • Nightlight, Alarm, Assembled in U.S.A., Blank Face and SNAPConnect®	L-5
Hospital Grade: • Non-TR, Nightlight, Alarm, Assembled in U.S.A. and SNAPConnect®	L-6
Tamper-Resistant and Weather Resistant: • TR/WR, Assembled in U.S.A., Isolated Ground, Hospital Grade and SNAPConnect®	L-7
Weather Resistant Only	L-8
UL 508 1.5HP Rated Ground Fault Receptacle	L-8

Product	Page
SNAPConnect® Features and Labor Savings	L-9
Arc Fault AFCI Receptacles	L-10
Dual Function AFCI/GFCI Receptacles	L-11
GFCI Sensing Module, 50A Maximum Rating	L-12
Straight Blade Portable GFCI Plugs	L-13
Circuit Guard® Plug-In Portable GFCI and Tester	L-14
Portable GFCI Line Cords	
Industrial Grade, Automatic and Manual Set	L-16
Commercial Grade, Automatic and Manual Set	L-17
Multiple Outlet, Portable GFCI and Module	L-18
Hard Wired 30 Amp GFCI - NEMA Type 4X	L-19
120V AC, 240V AC with and without Alarm 120/240V AC, 3Ø 250V AC, 3Ø 120/208V AC	
Portable 30 Amp GFCI - NEMA Type 4X	L-20
120V AC, 240V AC with and without Alarm 120/240V AC, 3Ø 250V AC, 3Ø 120/208V AC	

Features and Benefits

AUTOGUARD® Self Test Technology 1st introduced by Hubbell Over 10 Years Ago!
Self Test Monitoring Now Required in 2015 UL943 GFCI Safety Standad.

Hubbell Self Test GFCI Patented Technology

Hubbell AUTOGUARD® GFCI receptacles continually test and monitor for "people protection capability" automatically. This patented safety feature includes disconnecting power to the receptacle if critical components are damaged and GFCI protection is lost. GFCI auto-monitoring is conducted continuously within every 30 seconds.

Also, clear visual indicators are provided on the device face representing power status, trip condition, ground fault condition and end of life status. In addition, for added safety, power will be denied to the receptacle face if reverse wiring of line and load was to occur.

UL (Underwriters Laboratory) now requires all manufacturers to provide self test monitoring capability effective June 29, 2015. When was the last time you tested a GFCI receptacle? Industry studies indicate only a very small number of installations are actually being tested as is recommended by the manufacturer and UL. This is the fundamental reason this revision has been incorporated into UL943 standard for 2015.

Each GFR must automatically monitor GFCI functionality periodically	If the unit can no longer provide GFCI protection, it must comply with the following	Reverse line and load miswire function – (repeated)
Automatically test within (5) seconds of power to line and load terminals; periodically means every (3) hours or less.	Deny Power (trip with the inability to reset); if unit does reset it is subject to the next auto-monitoring test cycle. Visual and/or audible indication that it no longer can provide protection.	If the line conductor is wired to the load terminal, power to the receptacle face will be denied. This includes both the initial installation and any subsequent reinstallations.



GFRST15WNL







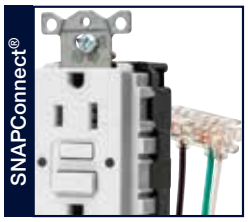









Features and Benefits

- **Patented AUTOGUARD® Technology** — Continuous Self Test functionality and disconnects power to receptacle if critical components are damaged and GFCI protection is lost
- **Federal Communications Commission Part 15** — Compliant for radiated and conducted emissions
- **Thermoplastic Nylon Housing** — High Impact and Ultraviolet Resistant construction provides resilience in harsh environments
- **Clear Visual Indication of GFR Status** — LED Indicating Lights:
  - Green LED (power to the device)
  - Red LED (trip condition/ground fault condition)
  - Flashing Red LED (end of life)
- **Internal Back Wiring Clamp and Guide Pocket** — Quick and dependable termination
- **Protection Against Line and Load Reversal** — No power to the face or downstream receptacles if device is miswired
- **Installation Ease, Lower Labor Cost** — With auto-grounding clip, captive mounting screws and single tab "breakoff" ears and full "breakoff" for OEM raised covers
- **Night Light Option** — Light sensor controls for automatic "ON/OFF" and custom dual lens for optimum light output

Features and Benefits



Extra Heavy Duty Industrial and Hospital Grade GFCI Receptacles Tamper-Resistant and Weather Resistant

10kA Short Circuit Current Rating

Limits improper access to energized contacts

- Exclusive patented tamper-resistant protection through switching technology
- Continually tests and monitors for people protection automatically
- Patented self test diagnostics

Power indication

- Steady **"ON" GREEN LED** provides indication of power

Ground fault indicator

- Steady **"ON" RED LED** provides visual indication of a ground fault condition; flashing red indicates device has lost capability to provide protection

No power at face if reverse wired

- Open circuit condition eliminates false assumption of protection at face

Durable face with V-0 flammability rating

- Polyester face cover





AUTOGUARD® Self Test GFCI Receptacles Tamper-Resistant and Weather Resistant

Description	Rating	Color	Standard	Hospital Grade
Flush, polyester face, back and side wired, multiple drive screws.	15A 125V NEMA 5-15R UL CSA 0.5 HP	Black	**GFR5262SGBK**	**GFR8200SGBK**
		Brown	**GFR5262SG**	**GFR8200SG**
		Gray	**GFR5262SGGY**	**GFR8200SGGY**
		Ivory	**GFR5262SGI**	**GFR8200SGI**
		Red	**GFR5262SGR**	**GFR8200SGR**
		White	**GFR5262SGW**	**GFR8200SGW**
Flush, polyester face, back and side wired, multiple drive screws.	20A 125V NEMA 5-20R UL CSA 1 HP	Black	**GFR5362SGBK**	**GFR8300SGBK**
		Brown	**GFR5362SG**	**GFR8300SG**
		Gray	**GFR5362SGGY**	**GFR8300SGGY**
		Ivory	**GFR5362SGI**	**GFR8300SGI**
		Red	**GFR5362SGR**	**GFR8300SGR**
		White	**GFR5362SGW**	**GFR8300SGW**

Note: GFCI type receptacles should not be used in critical care patient areas or for electrical life support equipment applications because of the possibility of power interruption. All GFCI receptacles listed above are furnished with both a matching color nylon wallplate, and a SS26 302/304 super stainless steel wallplate. 20 amp feed-through capability.
See page Tech-10 for Tamper-Resistant and Weather Resistant descriptions.

GFCI Receptacle Specifications per GFCI Products Listed (Pages L-3 to L-8)

Trip Level	4 to 6 mA.
Trip Time	.025 second nominal.
Frequency	60 Hz.
Voltage	120V AC +10% - 15% (102V to 132V).
Amperage	15A/20A, 20A Feed-Thru.
Maximum Interrupting Capacity	10,000A.
Operating Temperature	-35°C to 66°C or -30°F to 150°F.
Maximum Humidity	95%.
Listings and Standards	Meets UL498 for receptacles, UL943 Class A for GFCIs UL File E41978 CSA Certified.
Codes	Meets all NEC® and CEC requirements. NEMA WD-6 ANSI 73.

NEC® is a registered trademark of the National Fire Protection Association (NFPA).

Features and Benefits

Heavy Duty Commercial Tamper-Resistant GFCI Receptacles

- Patented shutter design for tamper-resistant protection
- Compliant with NEC® 406.12 and NEC® 517.18(C)
- Patented AUTOGUARD® self test technology includes disconnecting power to the receptacle if critical components are damaged and GFCI protection is lost
- Alarm version provides audible notification of a trip condition





Tamper-Resistant

Rating	Color	Standard	Night Light Two LED Night Lights	Alarm	Combination Switch 15A 120V Switch	Standard 3-Pack Three Devices per Pack
15A 125V NEMA 5-15R UL CSA 0.5 HP	Almond	GFTRST15AL	GFTRST15ALNL	GFTRST15ALB	—	—
	Black	GFTRST15BK	GFTRST15BKNL	GFTRST15BKB	—	—
	Brown	GFTRST15	GFTRST15NL	GFTRST15B	—	—
	Gray	GFTRST15GY	GFTRST15GYNL	GFTRST15GYB	—	—
	Ivory	GFTRST15I	GFTRST15INL	GFTRST15IB	GFSPST15I	GFTRST15I3
	Light Almond	GFTRST15LA	GFTRST15LANL	GFTRST15LAB	GFSPST15LA	GFTRST15LA3
	Red	GFTRST15R	GFTRST15RNL	GFTRST15RB	—	—
	White	GFTRST15W	GFTRST15WNL	GFTRST15WB	GFSPST15W	GFTRST15W3
20A 125V NEMA 5-20R UL CSA 1 HP	Almond	GFTRST20AL	GFTRST20ALNL	GFTRST20ALB	—	—
	Black	GFTRST20BK	GFTRST20BKNL	GFTRST20BKB	—	—
	Brown	GFTRST20	GFTRST20NL	GFTRST20B	—	—
	Gray	GFTRST20GY	GFTRST20GYNL	GFTRST20GYB	—	—
	Ivory	GFTRST20I	GFTRST20INL	GFTRST20IB	—	GFTRST20I3
	Light Almond	GFTRST20LA	GFTRST20LANL	GFTRST20LAB	—	GFTRST20LA3
	Red	GFTRST20R	GFTRST20RNL	GFTRST20RB	—	—
	White	GFTRST20W	GFTRST20WNL	GFTRST20WB	—	GFTRST20W3



Hospital Grade ● Tamper-Resistant

Rating	Color	Night Light Two LED Night Lights	Alarm
15A 125V NEMA 5-15R UL CSA 0.5 HP	Almond	GFTRST82ALNL	GFTRST82ALB
	Black	GFTRST82BKNL	GFTRST82BKB
	Brown	GFTRST82NL	GFTRST82B
	Gray	GFTRST82GYNL	GFTRST82GYB
	Ivory	GFTRST82INL	GFTRST82IB
	Light Almond	GFTRST82LANL	GFTRST82LAB
	Red	GFTRST82RNL	GFTRST82RB
	White	GFTRST82WNL	GFTRST82WB
20A 125V NEMA 5-20R UL CSA 1 HP	Almond	GFTRST83ALNL	GFTRST83ALB
	Black	GFTRST83BKNL	GFTRST83BKB
	Brown	GFTRST83NL	GFTRST83B
	Gray	GFTRST83GYNL	GFTRST83GYB
	Ivory	GFTRST83INL	GFTRST83IB
	Light Almond	GFTRST83LANL	GFTRST83LAB
	Red	GFTRST83RNL	GFTRST83RB
	White	GFTRST83WNL	GFTRST83WB

Product Dimensions

GFCI Receptacle	
A	3.27 (83.1)
B	2.75 (69.8)
C	1.75 (44.5)
D	1.47 (37.4)
E	1.10 (27.9)

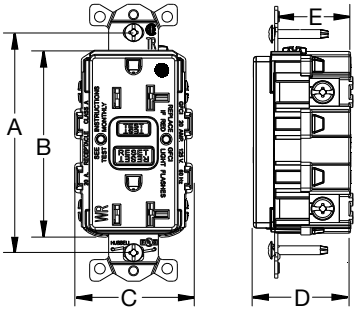

Note: GFCI type receptacles should not be used in critical care patient areas or for electrical life support equipment applications because of the possibility of power interruption. All GFCI receptacles are furnished with a matching color nylon wallplate, 20 amp feed-through capability.

Dimensions in Inches (mm)

NEC® is a registered trademark of the National Fire Protection Association (NFPA).

Features and Benefits

Heavy Duty Commercial Standard GFCI Receptacles

- Patented AUTOGUARD® self test technology includes disconnecting power to the receptacle if critical components are damaged and GFCI protection is lost
- Internal back wiring clamp and guide for quick and secure termination
- Night light option includes light sensor controls for automatic ON and OFF, custom dual lens for optimum light output



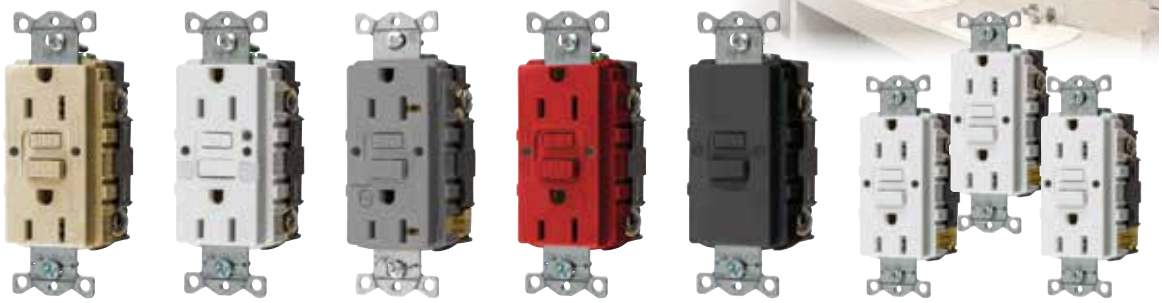

Standard

Rating	Color	Standard	Night Light Two LED Night Lights	Alarm	Assembled in USA	Blank Face Available in 20A Only	Standard 3-Pack Three Devices per Pack
15A 125V NEMA 5-15R UL CSA 0.5 HP	Almond	**GFRST15AL**	**GFRST15ALNL**	**GFRST15ALB**	**GFRST15ALU**	—	—
	Black	**GFRST15BK**	**GFRST15BKNL**	**GFRST15BKB**	**GFRST15BKU**	—	—
	Brown	**GFRST15**	**GFRST15NL**	**GFRST15B**	**GFRST15U**	—	—
	Gray	**GFRST15GY**	**GFRST15GYNL**	**GFRST15GYB**	**GFRST15GYU**	—	—
	Ivory	**GFRST15I**	**GFRST15INL**	**GFRST15IB**	**GFRST15IU**	—	**GFRST15I3**
	Light Almond	**GFRST15LA**	**GFRST15LANL**	**GFRST15LAB**	**GFRST15LAU**	—	**GFRST15LA3**
	Red	**GFRST15R**	**GFRST15RNL**	**GFRST15RB**	**GFRST15RU**	—	—
	White	**GFRST15W**	**GFRST15WNL**	**GFRST15WB**	**GFRST15WU**	—	**GFRST15W3**
20A 125V NEMA 5-20R UL CSA 1 HP	Almond	**GFRST20AL**	**GFRST20ALNL**	**GFRST20ALB**	**GFRST20ALU**	**GFBFST20AL**	—
	Black	**GFRST20BK**	**GFRST20BKNL**	**GFRST20BKB**	**GFRST20BKU**	**GFBFST20BK**	—
	Brown	**GFRST20**	**GFRST20NL**	**GFRST20B**	**GFRST20U**	**GFBFST20**	—
	Gray	**GFRST20GY**	**GFRST20GYNL**	**GFRST20GYB**	**GFRST20GYU**	**GFBFST20GY**	—
	Ivory	**GFRST20I**	**GFRST20INL**	**GFRST20IB**	**GFRST20IU**	**GFBFST20I**	**GFRST20I3**
	Light Almond	**GFRST20LA**	**GFRST20LANL**	**GFRST20LAB**	**GFRST20LAU**	**GFBFST20LA**	**GFRST20LA3**
	Red	**GFRST20R**	**GFRST20RNL**	**GFRST20RB**	**GFRST20RU**	**GFBFST20R**	—
	White	**GFRST20W**	**GFRST20WNL**	**GFRST20WB**	**GFRST20WU**	**GFBFST20W**	**GFRST20W3**

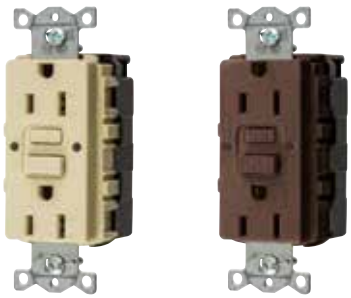

Standard SNAP*Connect*®

Rating	Color	Standard	Assembled in USA
15A 125V NEMA 5-15R UL CSA 0.5 HP	Almond	**GFRST15SNAPAL**	**GFRST15SNAPALNA**
	Black	**GFRST15SNAPBK**	**GFRST15SNAPBKNA**
	Brown	**GFRST15SNAP**	**GFRST15SNAPNA**
	Gray	**GFRST15SNAPGY**	**GFRST15SNAPGYNA**
	Ivory	**GFRST15SNAPI**	**GFRST15SNAPINA**
	Light Almond	**GFRST15SNAPLA**	**GFRST15SNAPLANA**
	Red	**GFRST15SNAPR**	**GFRST15SNAPRNA**
	White	**GFRST15SNAPW**	**GFRST15SNAPWNA**
20A 125V NEMA 5-20R UL CSA 1 HP	Almond	**GFRST20SNAPAL**	**GFRST20SNAPALNA**
	Black	**GFRST20SNAPBK**	**GFRST20SNAPBKNA**
	Brown	**GFRST20SNAP**	**GFRST20SNAPNA**
	Gray	**GFRST20SNAPGY**	**GFRST20SNAPGYNA**
	Ivory	**GFRST20SNAPI**	**GFRST20SNAPINA**
	Light Almond	**GFRST20SNAPLA**	**GFRST20SNAPLANA**
	Red	**GFRST20SNAPR**	**GFRST20SNAPRNA**
	White	**GFRST20SNAPW**	**GFRST20SNAPWNA**

Right Angle Pigtailed Terminal



Description	Type	Catalog Number
Clear right angle terminal with 6 inch leads, 600V, #12 AWG THHN/THWN-2, Polycarbonate housing material.	Solid	**SNAP1RA**
	Stranded	**SNAP2RA**
Same as above. Assembled in USA.	Solid	**SNAP1RNA**
	Stranded	**SNAP2RNA**

Note: GFCI type receptacles should not be used in critical care patient areas or for electrical life support equipment applications because of the possibility of power interruption. All GFCI receptacles are furnished with a matching color nylon wallplate, 20 amp feed-through capability.

Features and Benefits

Heavy Duty Commercial Standard Hospital Grade GFCI Receptacles

- Fed. Spec UL Listed, Hospital Grade
- Green power indicator and red trip indicator
- Patented AUTOGUARD® self test technology
- Flush, nylon face, back and side wired, multiple drive screws, self-grounding staple








Hospital Grade ●

Rating	Color	Standard	Night Light Two LED Night Lights	Alarm	Assembled in USA
15A 125V NEMA 5-15R UL CSA 0.5 HP	Almond	GFRST82AL	GFRST82ALNL	GFRST82ALB	GFRST82ALU
	Black	GFRST82BK	GFRST82BKNL	GFRST82BKB	GFRST82BKU
	Brown	GFRST82	GFRST82NL	GFRST82B	GFRST82U
	Gray	GFRST82GY	GFRST82GYNL	GFRST82GYB	GFRST82GYU
	Ivory	GFRST82I	GFRST82INL	GFRST82IB	GFRST82IU
	Light Almond	GFRST82LA	GFRST82LANL	GFRST82LAB	GFRST82LAU
	Red	GFRST82R	GFRST82RNL	GFRST82RB	GFRST82RU
	White	GFRST82W	GFRST82WNL	GFRST82WB	GFRST82WU
20A 125V NEMA 5-20R UL CSA 1 HP	Almond	GFRST83AL	GFRST83ALNL	GFRST83ALB	GFRST83ALU
	Black	GFRST83BK	GFRST83BKNL	GFRST83BKB	GFRST83BKU
	Brown	GFRST83	GFRST83NL	GFRST83B	GFRST83U
	Gray	GFRST83GY	GFRST83GYNL	GFRST83GYB	GFRST83GYU
	Ivory	GFRST83I	GFRST83INL	GFRST83IB	GFRST83IU
	Light Almond	GFRST83LA	GFRST83LANL	GFRST83LAB	GFRST83LAU
	Red	GFRST83R	GFRST83RNL	GFRST83RB	GFRST83RU
	White	GFRST83W	GFRST83WNL	GFRST83WB	GFRST83WU



Hospital Grade ● SNAP*Connect*®

Rating	Color	Standard
15A 125V NEMA 5-15R UL CSA 0.5 HP	Almond	GFRST82SNAPAL
	Black	GFRST82SNAPBK
	Brown	GFRST82SNAP
	Gray	GFRST82SNAPGY
	Ivory	GFRST82SNAPI
	Light Almond	GFRST82SNAPLA
	Red	GFRST82SNAPR
	White	GFRST82SNAPW
20A 125V NEMA 5-20R UL CSA 1 HP	Almond	GFRST83SNAPAL
	Black	GFRST83SNAPBK
	Brown	GFRST83SNAP
	Gray	GFRST83SNAPGY
	Ivory	GFRST83SNAPI
	Light Almond	GFRST83SNAPLA
	Red	GFRST83SNAPR
	White	GFRST83SNAPW



Right Angle Pigtailed Terminal

Description	Type	Catalog Number
Clear right angle terminal with 6 inch leads, 600V, #12 AWG THHN/THWN-2, Polycarbonate housing material.	Solid	SNAP1RA
	Stranded	SNAP2RA
Same as above. Assembled in USA.	Solid	SNAP1RNA
	Stranded	SNAP2RNA

Note: GFCI type receptacles should not be used in critical care patient areas or for electrical life support equipment applications because of the possibility of power interruption. All GFCI receptacles are furnished with a matching color nylon wallplate, 20 amp feed-through capability.

Features and Benefits

Heavy Duty Commercial Tamper and Weather Resistant GFCI Receptacles

- Patented shutter design for tamper-resistant protection
- Meets NEC® requirements for TR (406.12) and WR (406.9), UV and corrosion resistance for harsh and damp applications
- Patented AUTOGUARD® self test technology
- Protects against line and load reversal, no power to the face or downstream if device is miswired









Tamper-Resistant Weather Resistant

Rating	Color	Standard	Assembled in USA	Isolated Ground	SNAPConnect®	Right Angle Pigtailed Terminal
15A 125V NEMA 5-15R UL CSA 0.5 HP	Almond	GFTWRST15AL	GFTWRST15ALU	GFTWRST15ALIG	GFTWRST15SNAPAL	Clear right angle terminal with 6 inch leads, 600V, #12 AWG THHN/THWN-2, Polycarbonate housing material.
	Black	GFTWRST15BK	GFTWRST15BKU	GFTWRST15BKIG	GFTWRST15SNAPBK	
	Brown	GFTWRST15	GFTWRST15U	GFTWRST15IG	GFTWRST15SNAP	
	Gray	GFTWRST15GY	GFTWRST15GYU	GFTWRST15GYIG	GFTWRST15SNAPGY	
	Ivory	GFTWRST15I	GFTWRST15IU	GFTWRST15IIG	GFTWRST15SNAPI	
	Light Almond	GFTWRST15LA	GFTWRST15LAU	GFTWRST15LAIG	GFTWRST15SNAPLA	
	Red	GFTWRST15R	GFTWRST15RU	GFTWRST15RIG	GFTWRST15SNAPR	Solid **SNAP1RA**
	White	GFTWRST15W	GFTWRST15WU	GFTWRST15WIG	GFTWRST15SNAPW	Stranded **SNAP2RA**
20A 125V NEMA 5-20R UL CSA 1 HP	Almond	GFTWRST20AL	GFTWRST20ALU	GFTWRST20ALIG	GFTWRST20SNAPAL	Same as above. Assembled in USA.
	Black	GFTWRST20BK	GFTWRST20BKU	GFTWRST20BKIG	GFTWRST20SNAPBK	
	Brown	GFTWRST20	GFTWRST20U	GFTWRST20IG	GFTWRST20SNAP	
	Gray	GFTWRST20GY	GFTWRST20GYU	GFTWRST20GYIG	GFTWRST20SNAPGY	Solid **SNAP1RNA**
	Ivory	GFTWRST20I	GFTWRST20IU	GFTWRST20IIG	GFTWRST20SNAPI	Stranded **SNAP2RNA**
	Light Almond	GFTWRST20LA	GFTWRST20LAU	GFTWRST20LAIG	GFTWRST20SNAPLA	
	Red	GFTWRST20R	GFTWRST20RU	GFTWRST20RIG	GFTWRST20SNAPR	
	White	GFTWRST20W	GFTWRST20WU	GFTWRST20WIG	GFTWRST20SNAPW	







Hospital Grade ● Tamper-Resistant Weather Resistant

Rating	Color	Standard	Assembled in USA	Isolated Ground	SNAPConnect®	Right Angle Pigtailed Terminal
15A 125V NEMA 5-15R UL CSA 0.5 HP	Almond	GFTWRST82AL	GFTWRST82ALU	GFTWRST82ALIG	GFTWRST82SNAPAL	Clear right angle terminal with 6 inch leads, 600V, #12 AWG THHN/THWN-2, Polycarbonate housing material.
	Black	GFTWRST82BK	GFTWRST82BKU	GFTWRST82BKIG	GFTWRST82SNAPBK	
	Brown	GFTWRST82	GFTWRST82U	GFTWRST82IG	GFTWRST82SNAP	
	Gray	GFTWRST82GY	GFTWRST82GYU	GFTWRST82GYIG	GFTWRST82SNAPGY	
	Ivory	GFTWRST82I	GFTWRST82IU	GFTWRST82IIG	GFTWRST82SNAPI	
	Light Almond	GFTWRST82LA	GFTWRST82LAU	GFTWRST82LAIG	GFTWRST82SNAPLA	
	Red	GFTWRST82R	GFTWRST82RU	GFTWRST82RIG	GFTWRST82SNAPR	Solid **SNAP1RA**
	White	GFTWRST82W	GFTWRST82WU	GFTWRST82WIG	GFTWRST82SNAPW	Stranded **SNAP2RA**
20A 125V NEMA 5-20R UL CSA 1 HP	Almond	GFTWRST83AL	GFTWRST83ALU	GFTWRST83ALIG	GFTWRST83SNAPAL	Same as above. Assembled in USA.
	Black	GFTWRST83BK	GFTWRST83BKU	GFTWRST83BKIG	GFTWRST83SNAPBK	
	Brown	GFTWRST83	GFTWRST83U	GFTWRST83IG	GFTWRST83SNAP	
	Gray	GFTWRST83GY	GFTWRST83GYU	GFTWRST83GYIG	GFTWRST83SNAPGY	Solid **SNAP1RNA**
	Ivory	GFTWRST83I	GFTWRST83IU	GFTWRST83IIG	GFTWRST83SNAPI	Stranded **SNAP2RNA**
	Light Almond	GFTWRST83LA	GFTWRST83LAU	GFTWRST83LAIG	GFTWRST83SNAPLA	
	Red	GFTWRST83R	GFTWRST83RU	GFTWRST83RIG	GFTWRST83SNAPR	
	White	GFTWRST83W	GFTWRST83WU	GFTWRST83WIG	GFTWRST83SNAPW	

Note: GFCI type receptacles should not be used in critical care patient areas or for electrical life support equipment applications because of the possibility of power interruption. All GFCI receptacles are furnished with a matching color nylon wallplate, 20 amp feed-through capability.

NEC® is a registered trademark of the National Fire Protection Association (NFPA).

Features and Benefits

Heavy Duty Commercial Weather Resistant GFCI Receptacles



- Patented AUTOGUARD® self test technology
- Meets NEC® requirements for weather resistance (406.9), UV and corrosion resistance for harsh and damp applications
- Protects against line and load reversal, no power to the face or downstream if device is miswired





Weather Resistant

Rating	Color	Standard	Rating	Color	Standard
15A 125V NEMA 5-15R UL CSA 0.5 HP	Almond	**GFWRST15AL**	20A 125V NEMA 5-20R UL CSA 1 HP	Almond	**GFWRST20AL**
	Black	**GFWRST15BK**		Black	**GFWRST20BK**
	Brown	**GFWRST15**		Brown	**GFWRST20**
	Gray	**GFWRST15GY**		Gray	**GFWRST20GY**
	Ivory	**GFWRST15I**		Ivory	**GFWRST20I**
	Light Almond	**GFWRST15LA**		Light Almond	**GFWRST20LA**
	Red	**GFWRST15R**		Red	**GFWRST20R**
	White	**GFWRST15W**		White	**GFWRST20W**

Note: GFCI type receptacles should not be used in critical care patient areas or for electrical life support equipment applications because of the possibility of power interruption. All GFCI receptacles are furnished with a matching color nylon wallplate, 20 amp feed-through capability.

Features and Benefits

UL 508 1.5HP GFCI Receptacles

Hubbell AUTOGUARD® GFR products continually test and monitor for "people protection capability" automatically. This patented safety feature includes disconnecting power to the receptacle if critical components are damaged and GFCI protection is lost. Also, visual indicators are clearly provided on the device face representing "power status", "trip condition", "ground fault condition" and "end of life status".

- Blank face 1.5 horsepower motor control rated switch UL508 listed. Also listed to Underwriters Laboratories standard 943 for Class A GFCI
- If wired incorrectly there will be no power to the face or to downstream receptacles for added safety. (2) LED indicators provide immediate status of power, trip condition and ability to provide GFCI protection
- In addition to providing Class A GFCI protection, the HP series includes a 1.5 HP rating for motor control switching per UL508



GFBFHP20GY

UL 508 1.5HP GFCI

Rating	Color	Standard
20A 125V 1.5 HP	Black	**GFBFHP20BK**
	Brown	**GFBFHP20**
	Gray	**GFBFHP20GY**
	Ivory	**GFBFHP20I**
	Light Almond	**GFBFHP20LA**
	Red	**GFBFHP20R**
	White	**GFBFHP20W**



Note: GFCI type receptacles should not be used in critical care patient areas or for electrical life support equipment applications because of the possibility of power interruption. All GFCI receptacles are furnished with a matching color nylon wallplate, 20 amp feed-through capability.

NEC® is a registered trademark of the National Fire Protection Association (NFPA).

Meets UL Standard 943
Class A GFCI

Features and Benefits

Heavy Duty SNAPConnect® Commercial Grade GFCI Receptacles

Requires minimal box space
- Compact size
- Clean finished look

Installation ease
- Self-grounding staple

Audible SNAP, indicates solid connection
- Secure, easy grip latch

Inspection of power contacts
- Clear terminal housing
- No exposed metal

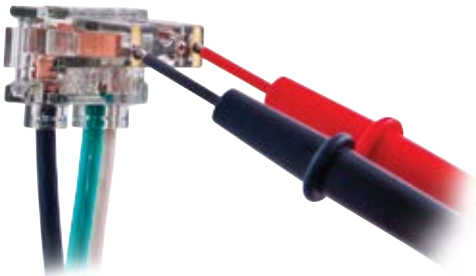

No Special Tester Required
.085 inch keyhole accepts the probe points found on the most common voltage testers and digital multi-meters



SNAP1RA
SNAP1RANA

GFRST20SNAPI
GFRST20SNAPINA

Labor Savings Feature!



Save one Minute!

Rough-in the SNAP*Connect*® terminal instead of pigtails.

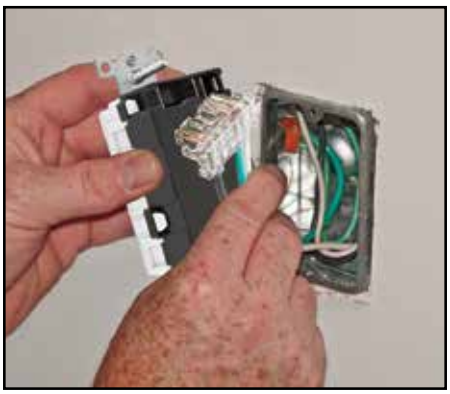

Save Over Three Minutes!

Remove protective packaging and SNAP*Connect*® device to the circuit.



Complete Trim-Out in Less Than One Minute!

Secure mounting screws, attach wallplate, job complete.

Features and Benefits

Arc Fault AFCI Receptacles

- Meets new 2017 National Electric Code for AFCI Protection
- Qualified to Federal Specification Listing WC596
- Meets or exceeds UL requirements for tripping time on series and parallel arcs
- Tamper-Resistant and self grounding construction are standard features
- Green power ON LED indicator
- Automatically tests the AFCI each time the reset button is pressed in place
- No reset when tested if AFCI functionality is compromised









Arc Fault AFCI Receptacles

Rating	Color	Standard	Rating	Color	Standard	Blank Face
 15A 125V NEMA 5-15R UL CSA 0.5 HP	Black	**AFR15TRBK**	 20A 125V NEMA 5-20R UL CSA 1 HP	Black	**AFR20TRBK**	—
	Brown	**AFR15TR**		Brown	**AFR20TR**	—
	Gray	**AFR15TRGY**		Gray	**AFR20TRGY**	—
	Ivory	**AFR15TRI**		Ivory	**AFR20TRI**	**AFR20BFI**
	Light Almond	**AFR15TRLA**		Light Almond	**AFR20TRLA**	**AFR20BFW**
	White	**AFR15TRW**		White	**AFR20TRW**	—

Specifications

Ratings

Amperage	15 Amp/20 Amp
Feed-thru	20 Amp Protection
Voltage	120V AC (+10% to15%) (102V to 132V)
Horsepower	(1) @ Rated Voltage
Flammability	Rated V2 per UL 94
Operating Temperature	(-35°C to 66°C) or (-30°F to 150°F)

Certifications

UL1699A	E366570
UL498	Receptacle
UL Fed Spec	WC-596
CSA Standard	C22.2 No. 42
CSA Tech	Letter No. M-02A
NEMA	WD-6

Tamper-Resistant
NEC® 406.12; 210.52 – All 15 and 20A 125V, receptacles shall be listed Tamper-Resistant for dwelling installations.

Construction

Termination	Back and Side
Terminal	#14-10 AWG
Grounding	Self-Grounding Clip
Indicators	Power & Rev Wire
Configuration	2 Pole, 3 Wire
NEMA	5-15R, 5-20R

The Hubbell "AFR" series meets all requirements for an outlet branch-circuit type AFCI; protects branch circuit wiring and extensions to branches such including appliances and cord sets.

Product Dimensions

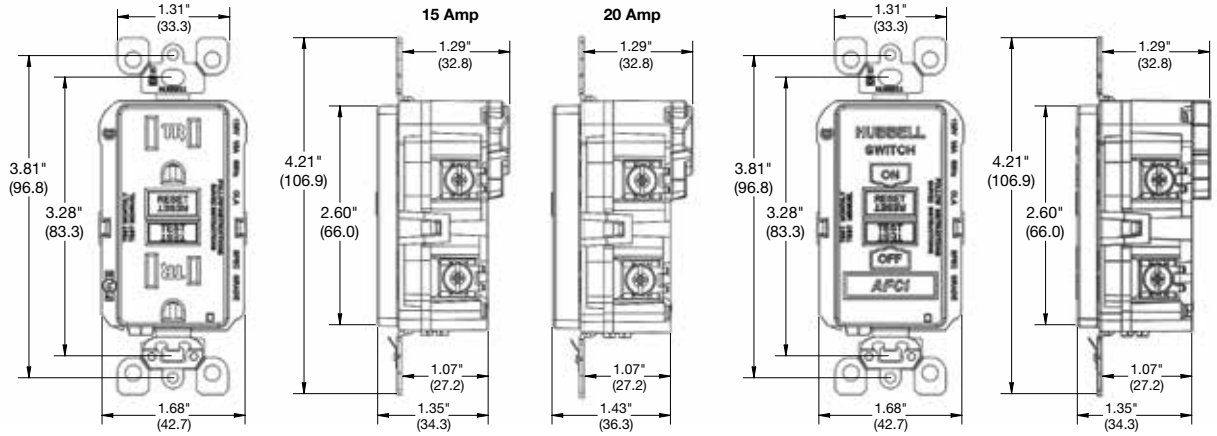

Dimensions in Inches (mm)

NEC® is a registered trademark of the National Fire Protection Association (NFPA).

Features and Benefits



Dual Function AFCI/GFCI Receptacles

- Cost effective solution conveniently located within living space; clearly visible, easily resettable if necessary
- Dual functionality, interrupts power if a ground fault or arc fault is detected
- Safety feature prevents device from resetting if it can no longer provide protection or is reverse wired
- Intuitive visual indication is provided for power (LED green ON); trip condition (LED green OFF)
- Clear indication if unit can no longer provide protection (LED red flashes) and will not reset





Dual Function AFCI/GFCI Receptacles

Rating	Color	Standard	Rating	Color	Standard
15A 125V NEMA 5-15R UL CSA 0.5 HP	Black	**AFGF15TRBK**	20A 125V NEMA 5-20R UL CSA 1 HP	Black	**AFGF20TRBK**
	Brown	**AFGF15TR**		Brown	**AFGF20TR**
	Gray	**AFGF15TRGY**		Gray	**AFGF20TRGY**
	Ivory	**AFGF15TRI**		Ivory	**AFGF20TRI**
	Light Almond	**AFGF15TRLA**		Light Almond	**AFGF20TRLA**
	White	**AFGF15TRW**		White	**AFGF20TRW**

Specifications

Ratings

Amperage	15 Amp/20 Amp
Feed-thru	20 Amp Protection
Voltage	120V AC (+10% to -15%) (102V to 132V)
Horsepower	(1) @ 120V AC
Flammability	Rated V2 per UL 94
Operating Temperature	(-35°C to 66°C) or (-30°F to 150°F)

Certifications

UL1699A	E485931
UL498	Receptacle
UL943	GFCI
UL Fed Spec	WC-596
CSA Standard	C22.2 No. 42
CSA Tech	Letter No. M-02A
NEMA	WD-6

Construction

Termination	Back and Side
Terminal	#14-10 AWG
Grounding	Autoground Clip
Indicators	Power, Trip, End of Life
Configuration	2 Pole, 3 Wire
NEMA	5-15R, 5-20R

Product Dimensions

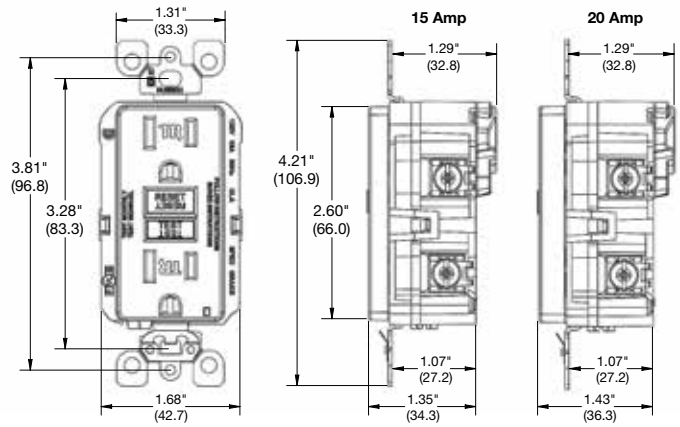

Dimensions in Inches (mm)

NEMA Type 4X

Typical Applications Include:

Power Generators, Spas, High Pressure Washers, Power Centers, Refineries and Mobile Power.






The sensing module functions interdependently with a magnetic branch circuit breaker. The module monitors the electrical circuit by use of an external differential current transformer. No direct load is present at the module. In the event of a ground fault, the load is interrupted by way of the hydraulic magnetic circuit breaker utilizing a shunt trip coil.

This line of Sensing Modules is rated from 1 to 50 Amps and circuit current-carrying conductors from 1 to 3 poles.

Product is available with an automatic or manual “safe start” reset feature. The enclosure, when mounted with the supplied gasket, achieves a UL NEMA Type 4X Rating. This module and breaker system is ideal for portable generator integration protecting all outlets on a generator. This system meets the proposed requirements for generators Underwriters Laboratory Standard 2201. UL/cUL 943 Listed, Class A 4-6mA trip level and UL1053 Compliant.



GFSM120M



GFSMCB120401P

GFCI Sensing Module, 50A Maximum

Description	Catalog Number
120V AC Sensing Module Auto	**GFSM120A**
120V AC Sensing Module Manual	**GFSM120M**
240V AC Sensing Module Auto	**GFSM240A**
240V AC Sensing Module Manual	**GFSM240M**

GFCI Sensing Module Circuit Breakers

Catalog Number Configurator

Ground Fault Sensing Module Circuit Breaker	A/C Voltage	Amperage	Number of Poles	Sensing Module Required
GFSMCB	120	1 to 50	1	**GFSM120A** or **M**
	120		2	**GFSM120A** or **M**
	240		2	**GFSM240A** or **M**
	120/240		2	**GFSM120A** or **M**
	120/240		3	**GFSM120A** or **M**

Example Catalog Numbers: **GFSMCB120401P:** 120V, 40A, 1 Pole
GFSMCB240502P: 240V, 50A, 2 Pole
GFSMCB120240203P: 120/240V, 20A, 3 Pole

Note: Voltage tolerance +10% / -15%.
Consult factory for other available configurations.

Wiring Schematics

GFSMCB120xx1P

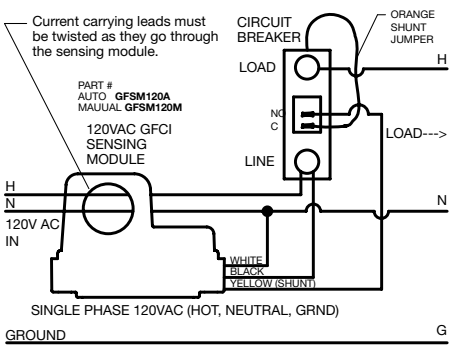

SINGLE PHASE 120VAC (HOT, NEUTRAL, GRND)

GFSMCB240xx2P

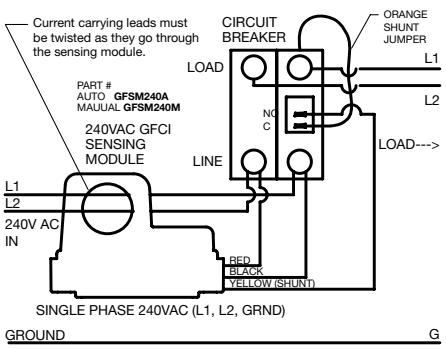

SINGLE PHASE 240VAC (L1, L2, GRND)

GFSMCB120240xx3P

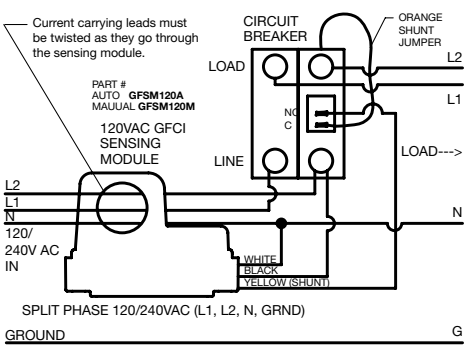

SPLIT PHASE 120/240VAC (L1, L2, N, GRND)

Dimensions in Inches (mm)

Circuit Guard® Wired On Industrial Portable GFCI Plug

Description	Rating	Catalog Number
GFCI plug, manual set, black.	2 pole, 3 wire grounding, 15A, 125V, NEMA 5-15P.	**GFP5266C**
GFCI plug, manual set, yellow.	2 pole, 3 wire grounding, 15A, 125V, NEMA 5-15P.	**GFP5266CY**
GFCI plug with 1 foot line cord, manual set, yellow, with connector body.	2 pole, 3 wire grounding, 15A, 125V, NEMA 5-15P, NEMA 5-15R.	**GFP1C**



GFP5266CY

Circuit Guard® Wired On Commercial Portable GFCI Plug

Description	Rating	Catalog Number
GFCI plug, automatic set field wireable, black.	2 pole, 3 wire grounding, 15A, 125V, NEMA 5-15P.	**GFP515A**
GFCI plug, manual set field wireable, black.	2 pole, 3 wire grounding, 15A, 125V, NEMA 5-15P.	**GFP515M**



GFP1C

Specifications

Trip Level	4 to 6 mA.
Trip Time	.025 sec. nominal.
Frequency	60 Hz.
Voltage	120V AC +10% – 15%. Incorporates no voltage release feature.
Amperage	15A.
Maximum Interrupting Capacity	2,000A.
Operating Temperature	-35°C to 66°C or -30°F to 150°F.
Maximum Humidity	95%.
Housing	High-impact, UV stabilized material. UL94V-0 flammability classification.
Input	NEMA 5-15P.
Cord Range	16/3 – 12/3 Type SJ, 18/3 – 12/3 Type S.
Cord Type: Length (GFP1C)	14/3 Type SJTW-A (UL), SJTW (CSA); 1 foot; NEMA 5-15R.
Power "ON" Indication	Indicator light.
Listings	Meets UL943 Class A Listed, CSA Certified.
Codes	Meets all NEC® and CEC requirements.



GFP515A

Product Dimensions

GFP5266C Series

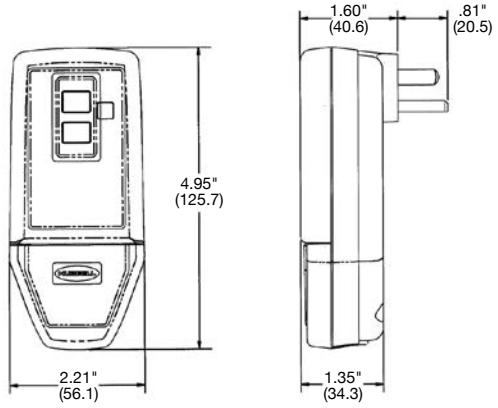

GFP515 Series

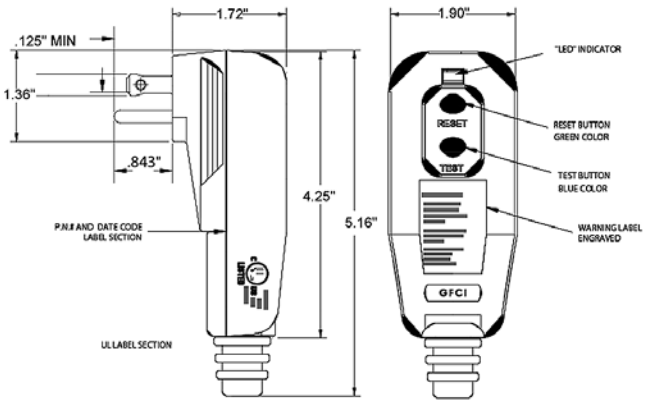

NEC® is a registered trademark of the National Fire Protection Association (NFPA).

Dimensions in Inches (mm)

Plug-In Portable GFCI and GFCI Tester



GFP315A

Circuit Guard® Plug-In Portable GFCI

Description	Rating	Catalog Number
Three outlet plug-in.	15A, 120V AC	**GFP315A**

Specifications

GFP315A	
Trip Level	4 to 6 mA.
Trip Time	.025 sec. nominal.
Frequency	60 Hz.
Voltage	120V AC +10% – 15%. Incorporates no voltage release feature.
Amperage	15A.
Maximum Interrupting Capacity	2000A.
Operating Temperature	-35°C to 66°C or -30°F to 150°F.
Maximum Humidity	95%.
Housing	High-impact ABS.
Input	NEMA 5-15P.
Output	3 NEMA 5-15R.
Fault Indication	Indicator light.
Center Screw	For optional permanent mounting.
Listings and Standards	Meets UL498 for receptacles, UL943 Class A for GFCIs UL File E41978, CSA Certified.
Codes	Meets all NEC® and CEC requirements.



GFT2G

GFCI Tester

Description	Rating	Catalog Number
Ground fault tester.	120V AC	**GFT2G**

- Designed to measure the trip level of portable or “wired-in” GFCI’s in a range of 2-7mA. Leakage level can be adjusted from 2-7mA.
- Ideal for measuring leakage level of GFCI breakers, GFCI portables and GFCI receptacles.

Product Dimensions

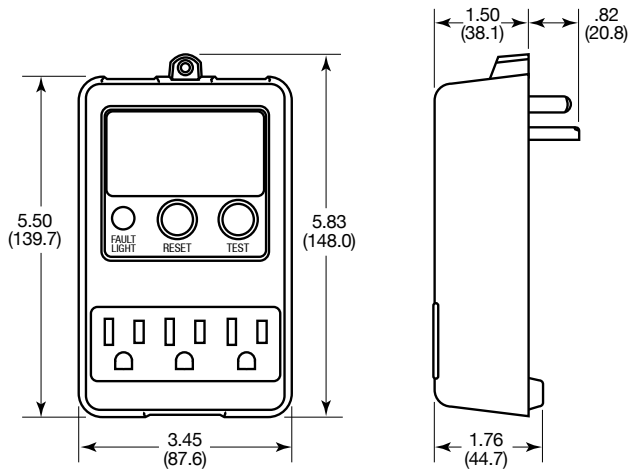

Dimensions in Inches (mm)

NEC® is a registered trademark of the National Fire Protection Association (NFPA).

Features and Benefits

Circuit Guard® Portable GFCI Line Cords

Portable GFCI Line Cords provide ground fault protection both indoors and out. They interrupt electrical power for equipment loads when leakage to ground is 4-6 milliamperes. Available in lengths of 18" (45.7 cm), 6' (182.9 cm), and 25' (762 cm). A 15' (457.2 cm) OEM version with stripped leads is also available. They are offered with an Automatic Set or Manual Set feature to meet your application.



GFP4C15M



Housing Design

- High impact UV stabilized housing resists dust, sunlight and chemicals for long life
- Watertight GFCI housing for use in harsh environments
- Available in Automatic Set with yellow base or Manual Set with black base



Molded Strain Relief

- Heavy-duty molded strain relief prevents conductor strain and resulting failure



Safety

- One-piece flush sealed keypads for greater reliability and resistance to damage due to impact
- Bright fault indicator light provides fault confirmation from a distance



Plug and Connector

- Heavy-duty molded plug and connector for reliable connection
- Solid (not formed) plug blades are crimped and soldered for a better connection and longer life

Industrial Grade, Portable GFCI Line Cords

IP21
SUITABILITY



GFP4C15A

Circuit Guard® Portable GFCI Line Cords, 15A 120V AC

Description	Automatic Set.	Manual Set
18" (45.7 cm) GFCI line cord.	**GFP4C15A**	**GFP4C15M**
6' (182.9 cm) GFCI line cord.	**GFP6C15A**	**GFP6C15M**
25' (762.0 cm) GFCI line cord.	**GFP25C15A**	**GFP25C15M**
15' (457.2 cm) GFCI power supply cord with stripped leads.	**GFPOEMA***	**GFPOEMM***
50' (1524.0 cm) GFCI power supply with Elastogrip® watertight straight blade.	–	**GFP50C15WM**
100' (3048.0 cm) GFCI power supply with Elastogrip® watertight straight blade.	–	**GFP100C15WM**

*Note: *Total length is 15' 4.5" (468.6 cm) including leads: green 4.5" (114.3), black and white 3.5" (88.9). Each pre-stripped .375" (9.5).*



GFP25C15A

Circuit Guard® Portable GFCI Line Cords, 20A 120V AC

Description	Automatic Set.	Manual Set
3' (91.4 cm) GFCI line cord.	–	**GFP3C20M**

Circuit Guard® Manual Set Twist-Lock Portable GFCI Line Cords

	15A 120V AC	20A 120V AC
Description	Catalog Number	
3' (91.4 cm) GFCI line cord.	**GFP3C15MTL**	**GFP3C20MTL**



GFP6C15M

Automatic Set GFCI
Automatically energizes or sets the GFCI for use upon plug in and after the loss of primary power (power failure or unplugging the device). After a ground fault condition, unit must be reset by pushing the reset button. This feature eliminates the need for unit to be reset each time it is plugged in or powered up. Ideal for equipment intended for continuous use where a temporary power failure is likely and undesirable. Examples are pumps, pressure washers, portable signs or lighting and engine heaters.

Manual Set GFCI
Requires the GFCI to be manually set for use by pressing the reset button upon plug in and after loss of primary power (power failure or unplugging the device). Must be manually reset after a ground fault condition. Ideal for applications where operator injury might occur if equipment were to restart after a power failure. Typical equipment includes power drills, saws, lathes and grinders.



GFPOEMM

	Straight Blade	Twist-Lock®
Input	15A NEMA 5-15P, 20A NEMA 5-20P.	15A NEMA L5-15P HBL47CM20C, 20A NEMA L5-20P HBL23CM11.
Output	15A NEMA 5-15R (except GFPOEMM), 20A NEMA 5-20R.	15A NEMA L5-15R HBL47CM29C, 20A NEMA L5-20R HBL23CM13.



GFP3C20MTL

Specifications

Portable GFCI Line Cords

Trip Level	4 to 6 mA.
Trip Time	.025 sec. nominal.
Frequency	60 Hz.
Voltage	120V AC +10% – 15%. Incorporates no voltage release feature.
Amperage	15A/20A.
Maximum Interrupting Capacity	2000A.
Operating Temperature	-35°C to 66°C or -30°F to 150°F.
Maximum Humidity	95%.
Housing	High-impact, UV stabilized PVC. UL 94V-0 flammability classification. Meets UL and CSA watertight requirements. Adhesive bonded.
Cord Type	14/3 SJTW-A (UL), SJTW (CSA). Except GFP3C20M, GFP3C15MTL and GFP3C20MTL are 12/3 SJTW.
Visual Fault Indication Light On	Indicates fault.
Listing and Standards	Meets UL943 Class A, UL File E41978, CSA Certified.
Codes	Meets all NEC® and CEC requirements.

NEC® is a registered trademark of the National Fire Protection Association (NFPA).

Commercial Grade, Portable GFCI Line Cords

Circuit Guard® Portable GFCI Single Outlet, 15A 120V AC - 12/3 SJEOW

Description	Automatic Set.	Manual Set
2' (60.9 cm) GFCI line cord.	**GFP2CA**	**GFP2CM**
25' (762.0 cm) GFCI line cord.	**GFP25CA**	**GFP25CM**



GFP2CA

Circuit Guard® Portable GFCI Triple Tap Outlet, 15A 120V AC - 12/3 SJEOW

Description	Automatic Set.	Manual Set
2' (60.9 cm) GFCI line cord.	**GFP2TTA**	**GFP2TTM**
25' (762.0 cm) GFCI line cord.	**GFP25TTA**	**GFP25TTM**



GFP2TTA

Circuit Guard® OEM Equipment Integrated Cord Sets, 15A 120V AC - 14/3 SJEOW

Description	Automatic Set.	Manual Set
15' (457.2 cm) GFCI with flying leads.	**GFP15LA**	**GFP15LM**
35' (1066.8 cm) GFCI with flying leads.	**GFP35LA**	**GFP35LM**



GFP15LA

15A GFCI In Line GFCI, Single and Triple Tap, 15A 120V AC - 12/3 SJTW

Description	Automatic Set.	Manual Set
2' (60.9 cm), 5-15 single tap.	**GFPIL15125A**	**GFPIL15125M**
2' (60.9 cm), 5-15 triple tap.	**GFPIL15125TRIA**	**GFPIL15125TRIM**

20A GFCI In Line GFCI, Locking, 20A 120V AC - 12/3 SJTW

Description	Automatic Set.	Manual Set
2' (60.9 cm), L5-20 locking.	**GFPIL20125LKA**	**GFPIL20125LKM**

20A GFCI In Line GFCI, Locking, 20A 250V AC - 12/3 SJTW

Description	Automatic Set.	Manual Set
2' (60.9 cm), L6-20 locking.	**GFPIL20250LKA**	**GFPIL20250LKM**



GFPIL15125TRIM



GFPIL20125LKA



GFPIL20125LKM

Specifications

Portable GFCI Line Cords

Trip Level	4 to 6 mA.
Trip Time	.025 sec. nominal.
Frequency	60 Hz.
Voltage	120/250V AC +10% - 15%. Incorporates no voltage release feature.
Amperage	15A/20A.
Maximum Interrupting Capacity	2000A.
Operating Temperature	-35°C to 66°C or -30°F to 150°F.
Maximum Humidity	95%.
Housing	High-impact, UV stabilized PVC. UL 94V-0 flammability classification. Meets UL and CSA watertight requirements. Adhesive bonded.
Visual Fault Indication Light On	Indicates fault.
Listing and Standards	Meets UL943 Class A, UL File E41978, CSA Certified.
Codes	Meets all NEC® and CEC requirements.

NEC® is a registered trademark of the National Fire Protection Association (NFPA).

IP21
SUITABILITY



GFP15M

Multiple Outlet Portable GFCI

Description	Rating	Receptacles	Plug	Catalog Number
4 outlet, manual set, yellow.	15A, 120V AC	(2) Duplex 5-15R	NEMA 5-15P	**GFP15M**
4 outlet, manual set, yellow.	20A, 120V AC	(2) Duplex 5-20R	NEMA 5-20P	**GFP20M**



GFM20

GFCI Module - UL Type 3R Rated

Description	Rating	Catalog Number
GFCI module, manual set, yellow.	20A, 120V AC, 60 Hz	**GFM20**
GFCI module, auto set, yellow.	20A, 120V AC, 60 Hz	**GFM20A**

Specifications

	GFP15M / GFP20M	GFM20 / GFM20A
Trip Level	4 to 6 mA.	4 to 6 mA.
Trip Time	.025 sec. nominal.	.025 sec. nominal.
Frequency	60 Hz.	60 Hz.
Voltage	120V AC +10% - 15%. No voltage release feature.	120V AC +10% - 15%. No voltage release feature.
Maximum Interrupting Capacity	5000A.	5000A.
Current	15A / 20A.	20A / 20A Feed-through.
Operating Temperature	-35°C to 66°C or -30°F to 150°F.	-35°C to 66°C or -30°F to 150°F.
Housing Rating	High-impact, yellow Valox® with protective lift covers.	High-impact, UV stabilized, rigid PVC. UL 94V-0 flammability classification. UL Type 3R Rated.
Input	5-15P, 15A / 5-20P, 20A. IP21 Suitability.	#12 AWG stranded conductors (black/white/green).
Output	5-15R(4), 15A / 5-20R(4), 20A.	#12 AWG stranded conductors (red/gray).
Power Supply Cord	6' (182.9 cm) STOW-A (STW FT2 CSA).	N/A.
Mounting Screws	N/A.	Self-tapping, combination, #6-32.
Power “ON” Indication	LED indicator light.	LED indicator light.
Agency Approvals	UL Listed, UL498 for receptacles. Meets UL943 Class A for GFCI’s.	UL Listed, CSA Certified. Meets UL943 Class A for GFCI’s.
Codes	Meets all NEC® and CEC requirements.	Meets all NEC® and CEC requirements.

Valox® is a trademark of SABIC Innovative Plastics, acquired from General Electric Company.
NEC® is a registered trademark of the National Fire Protection Association (NFPA).

Applications

Power Generators
Submersible Pumps
Textile



Agricultural Equipment
Cement Cutting Equipment
Food Processing



Production Assembly Equipment
Spa and Hot Tubs
Vending Equipment



Extra Heavy Duty Industrial Circuit Guard® Hard Wired 30A GFCI - UL Type 4X Rated

Description	Voltage	Alarm	Manual Set	Automatic Set
Hard wired, manual set and automatic set GFCIs.	120V AC	None	**GFHW13005**	**GFHW13105**
	120V AC	Audible	**GFHW13015**	**GFHW13115**
	240V AC	None	**GFHW23005**	**GFHW23105**
	240V AC	Audible	**GFHW23015**	**GFHW23115**
	120/240V AC	Audible	**GFHW33015**	**GFHW33115**
	3Ø 250V AC	None	**GFHW530**	**GFHW531**
	3Ø 120/208V AC	None	**GFHW430**	**GFHW431**



Automatic Reset GFCI



Manual Reset GFCI

Specifications

Electrical Ratings	
Rated Voltage	120V AC, 240V AC, 120/240V AC, 3Ø 250V AC, 3Ø 120/208V AC.
Operating Voltage Range	85% to 110%.
Current	Up to 30A or device rating.
Frequency	60 Hz.
Trip Level	4-6 mA.
Phase	Single.
Response Time	.025 sec. Max.
Dielectric Withstand	1500 VRMS across contact, 4000 VRMS between conductors and enclosure.
Surge Withstand	6000V impulse, 0.5 microseconds rise time 100kHz ringing frequency with 40% decay per cycle.
Let Go Line Voltage	60% of rated.
Grounded Neutral Detection	6 Ohms or less.
Power Up	Manual or automatic reset.
Environmental Ratings	
Housing Rating	UL Type 4X.
Construction	Industrial grade design.
Type	Class A GFCI.
Operating Temperature	-35°C to 66°C, -30°F to 150°F.
Leakage Current @ 93% Humidity	Zero.
Features	
Life (Endurance)	10,000 cycles (6000 with load and 4000 without load). Open neutral protection Trips upon loss of neutral.
Grounded Neutral Protection	Trips if ground and neutral touch at load side.
Power On Indicator	Green light on.
Power Off Indicator	Red blinking light plus optional audible alarm.
Wiring Application	3 Wire Single Phase (Hot, Neutral and Ground), 4 Wire Single Phase (Line 1,Line 2, Neutral and Ground).
Switch Interface	Double Insulated.
Latching Mechanism	Electromagnetic.
Physical Specifications	
Wire Leads	#10 AWG, 24" long.
Unit Color	Gray with black cover.
Label Color on Portable and Hard Wired Units	Automatic reset: yellow background with black lettering. Manual reset: black background with yellow lettering.
Weight	1.40 lbs.

Related Code

Confined Space	OSHA 29 CFR 1926.404 (b) (1) (ii)
	OSHA 29 CFR 1926.405 (a) (2) (ii) (G)
Construction Sites	NEC 590.6
Commercial Garages	NEC 511.12
Fountains	NEC 680.5B
Spas and Hot Tubs	NEC 680.40
Marinas	NEC 555.3

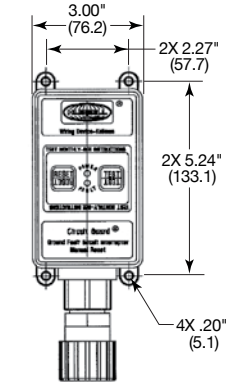

Product Dimensions

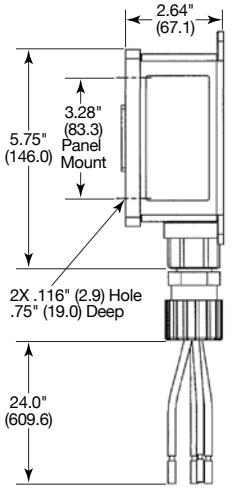

Side View

Dimensions in Inches (mm)



GFP1311

Applications

Pressure Washers
De-icing Equipment
Pipeline Heaters



Portable Electric Heaters
Material Dryers
Automotive Garages



Portable Power Tools
Submersible Pumps
Outdoor Signage





GFPIL30250LKM

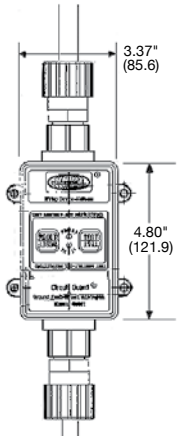

Product Dimensions

Extra Heavy Duty Industrial Circuit Guard® Portable 30A GFCI - UL Type 4X Rated

Description	Cord Length	Voltage	Manual Set	Automatic Set
Portable, manual set and automatic set GFCIs.	2' (60.9 cm)	120V AC	**GFP1301**	**GFP1311**
	6' (182.9 cm)	120V AC	**GFP1305**	**GFP1315**
	25' (762.0 cm)	120V AC	**GFP1302**	**GFP1312**
	50' (1524.0 cm)	120V AC	**GFP1303**	**GFP1313**
	2' (60.9 cm)	240V AC	**GFP2301**	**GFP2311**
	25' (762.0 cm)	240V AC	**GFP2302**	**GFP2312**
	6' (182.9 cm)	120/240V AC	**GFP3305**	**GFP3315**
	6' (182.9 cm)	3Ø 250V AC	**GFP5305**	**GFP5315**
	6' (182.9 cm)	3Ø 120/208V AC	**GFP4305**	**GFP4315**

Extra Heavy Duty Industrial Circuit Guard® 30A GFCI In Line GFCI – Locking

Description	Cord Length	Voltage	Manual Set	Automatic Set
L5-30 locking.	2' (60.9 cm)	120V AC	**GFPIL30125LKM**	**GFPIL30125LKA**
L6-30 locking.	2' (60.9 cm)	250V AC	**GFPIL30250LKM**	**GFPIL30250LKA**

Plug and Connector Selector Chart (partial listing)

The chart below is a list of possible Hubbell plug and connector body products that can be used with the Hubbell Portable GFCIs.

Family	Style	Amps	Voltage	Hubbell Catalog Number
Insulgrip®	Straight Blade	15	120V AC	**HBL5266C** & **HBL5269C**
Insulgrip®	Twist-Lock®	30	240V AC	**HBL2621** & **HBL2623**
Watertight Safety-Shroud®	Twist-Lock®	30	240V AC	**HBL2621SW** & **HBL2623SW**
IEC Pin & Sleeve	Watertight Pin & Sleeve	30	240V AC	**HBL330P6W** & **HBL330C6W**
Insulgrip® Pin & Sleeve	Insulgrip® Pin & Sleeve	30	240V AC	**HBL330PS2W** & **HBL330CS2W**
Hubbellock®	Hubbellock®	20	120V AC	**HBL23035B** & **HBL23032B**

Specifications

Electrical Ratings	
Rated Voltage	120V AC, 240V AC, 120/240V AC, 3Ø 250V AC, 3Ø 120/208V AC.
Operating Voltage Range	85% to 110%.
Current	Up to 30A or device rating.
Frequency	60 Hz.
Trip Level	4-6 mA.
Response Time	25 mS Max.
Dielectric Withstand	1500 VRMS across contact, 4000 VRMS between conductors and enclosure.
Surge Withstand	6000V impulse, 0.5 microseconds rise time 100kHz ringing frequency with 40% decay per cycle.
Let Go Line Voltage	60% of rated.
Power Up	Manual or Automatic reset.
Environmental Ratings	
Housing Rating	UL Type 4X.
Construction	Industrial grade design.
Type	Meets UL943 Class A GFCI.
Operating Temperature	-35°C to 66°C, -30°F to 150°F.
Leakage Current @ 93% Humidity	Zero.

Features	
Life (Endurance)	10,000 cycles (6000 with load and 4000 without load).
Open Neutral Protection	Trips upon loss of neutral.
Grounded Neutral Protection	Trips if ground and neutral touch at load side.
Power On Indicator	Green light on.
Power Off Indicator	Red blinking light plus optional audible alarm.
Wiring Application	3 Wire Single Phase (Hot, Neutral and Ground). 4 Wire Single Phase (Line 1, Line 2, Neutral and Ground).
Switch interface	Double Insulated.
Latching Mechanism	Electromagnetic.
Physical Specifications	
Cord Type	2-50', 10/3 SJGOOW. 100', 8/3 SEOW.
Unit Color	Gray with black cover.
Label Color on Portable and Hard Wired Units	Automatic reset: Yellow background with black lettering. Manual reset: Black background with yellow lettering.
Weight	2 ft. 1.8 lbs., 6 ft. 2.7 lbs., 25 ft. 6.8 lbs., 50 ft. 12.4 lbs.,100 ft. 23.3 lbs.

Related Code

Confined Space	OSHA 29 CFR 1926.404 (b) (1) (ii) OSHA 29 CFR 1926.405 (a) (2) (ii) (G)
Construction Sites	NEC 590.6
Commercial Garages	NEC 511.12
Outdoor Signs	NEC 600.10
Spas and Hot Tubs	NEC 680.40
Boat Yards	NEC 555.3

Dimensions in Inches (mm)