Circuit-Lock® NEMA 3 and 3R Enclosures with Switch

Ideal for use on outdoor equipment.

Amp	Poles	Enclosure Material	Water Ingress	HP Rating 120V AC 1Ø	240V AC 3Ø	480V AC 3Ø	600V AC 3Ø	Catalog Number
30	2	Thermoplastic	3	2	5	10	15	**HBL13R22**
30	3	Thermoplastic	3	3	7.5	15	20	**HBL13R23**
30	2	Aluminum	3/3R	2	5	10	15	**HBL13R12**
30	3	Aluminum	3/3R	3	7.5	15	20	**HBL13R13**

Note: See page F-21 for technical information.
**Drill weephole to alter from NEMA 3 to NEMA 3R.*



HBL13R23



HBL13R13

Dimensions

HBL13R22 and HBL13R23

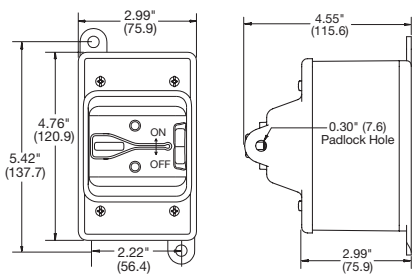

Front Side

HBL13R12 and HBL13R13

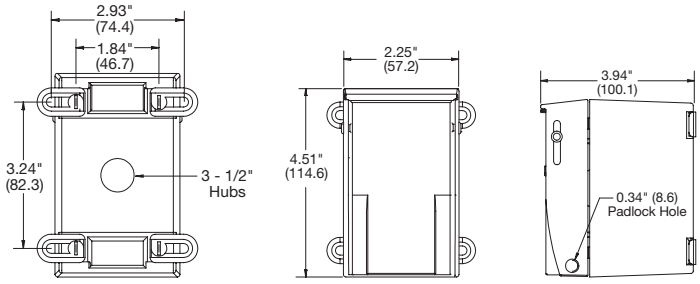

Back Front Side

Circuit-Lock® NEMA 3R Enclosures with Switch

Ideal for use in outdoor environments.

Amp	Poles	Enclosure Material	HP Rating 120V AC 1Ø	240V AC 3Ø	480V AC 3Ø	600V AC 3Ø	Catalog Number
30	2	Aluminum	2	5	10	15	**HBL13R92**
30	3	Aluminum	3	7.5	15	20	**HBL13R89**
60	2	Aluminum	—	10	15	20	**HBL16R92D**
60	3	Aluminum	—	10	25	30	**HBL16R93D**

Note: For switch specifications refer to page F-21.



HBL13R89



HBL16R93D

Circuit-Lock® NEMA 3R Enclosures without Switch

For use with switches shown on page F-21.

Description	Enclosure Material	Catalog Number
For use with 30A switch.	Aluminum	**HBL13R90**
For use with 60A switch.	Aluminum	**HBL16R90**

Dimensions

HBL13R90, HBL13R89 and HBL13R92

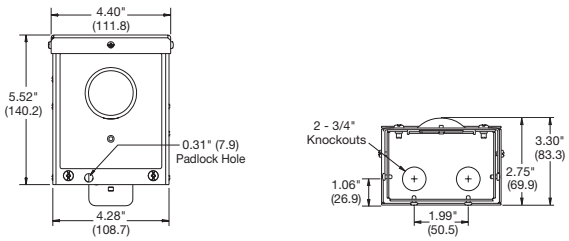

Front Bottom

HBL16R90, HBL16R92D and HBL16R93D

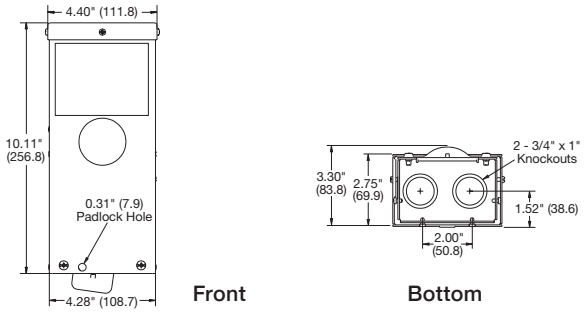

Front Bottom

Dimensions in Inches (mm)