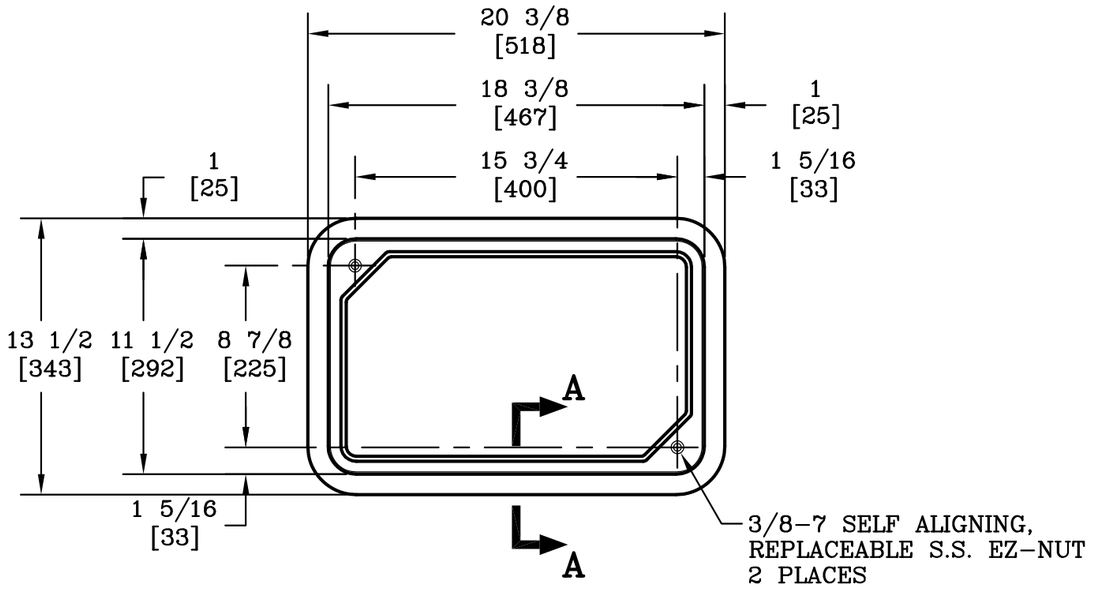

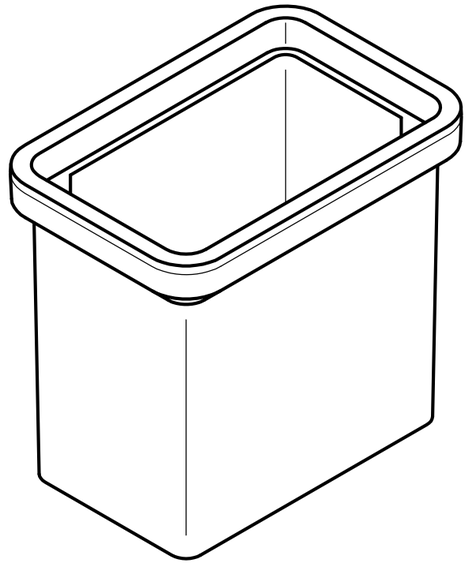

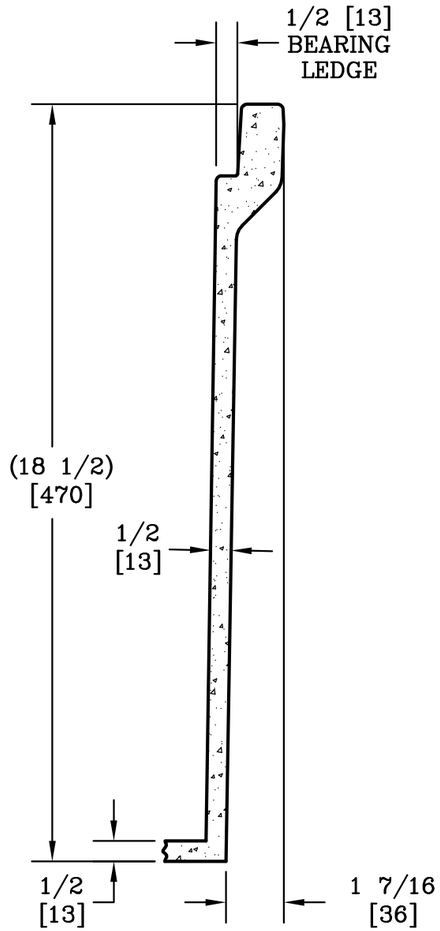

SECTION A–A

SCALE: 3"=1'

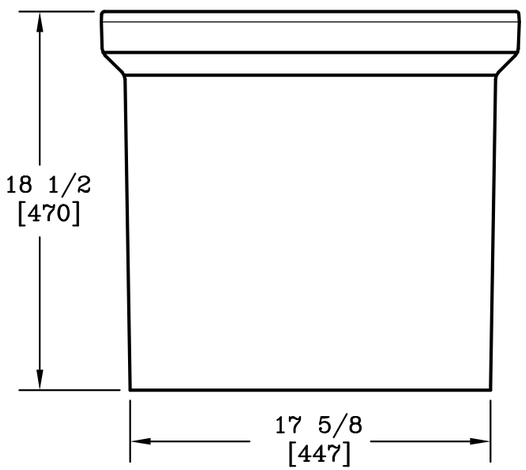

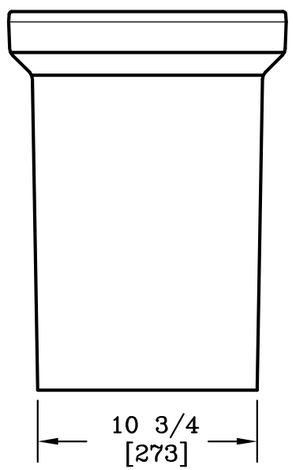

DIMENSIONS ARE IN INCHES OR MILLIMETERS IN BRACKETS UNLESS OTHERWISE NOTED.

	BY	DATE
DRN	JMW	7/18/00
CHK	WRJ	7/24/00
ENG		
APR	MEF	7/31/00
APR		

WEIGHT: 62# 28kg

SCALE: 1 1/2"=1'

SIZE: B

HUBBELL®
3621 INDUSTRIAL PARK DR
LENOIR CITY, TN 37771
800–346–3062
www.quazite.com

LOC: LC S

DRAWING DESCRIPTION
QUAZITE® BOX
STANDARD VERSION

REV: C 3/12

PROJECT NUMBER: 00522

SHEET 1 OF 1

DRAWING NUMBER: PG1118DA18

UL® LISTED