Fire-Rated Poke-Throughs

SystemOne Recessed

Sub-Plate

Features

- Steel Construction
- White Powder Coat Paint
- Includes Necessary Mounting Hardware
- (4) Controlled 20A Pre-Wired Receptacles



Ordering Information

Description	UPC Number	Catalog Number
Sub-plate for 6 inch FRPT 50% , right side, with 4 CONTROLLED marked pre-wired 20A receptacle cubes	783585545547	**S1R6SPHC4**

Listings

cULus Listed

Specifications

Material	Pre-Galvanized Steel
Finish	White Paint
Receptacle Housing	Black Thermoplastic
Contacts	Brass
Wire Leads	Insulated #12 Copper Wire
Plate Position	Right 50%
NEMA Configuration	5-20R
Face Marking	CONTROLLED
Wiring Method	1 or 2 Circuits

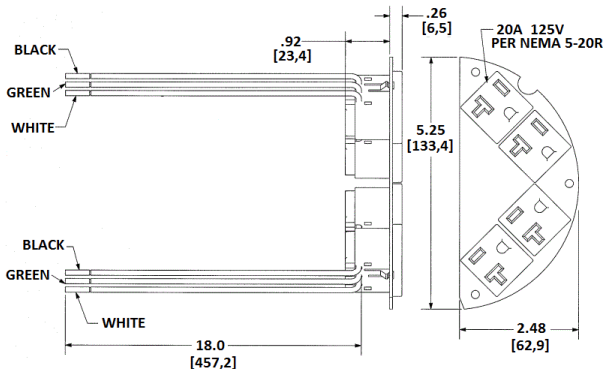

Related Products

Poke Through	S1R8PTFIT1
Poke Through	S1R8PTFIT2
Poke Through	S1R8PTFIT3
Poke Through	S1R8PTFIT1CHI
Poke Through	S1R8PTFIT2CHI

Online Resources

Customer Sales Drawings
eCatalog
Installation Instructions

Dimensions in Inches (mm)

Wiring Device-Kellems