M-10576 2

SHOWN WITHOUT CONCRETE COVER

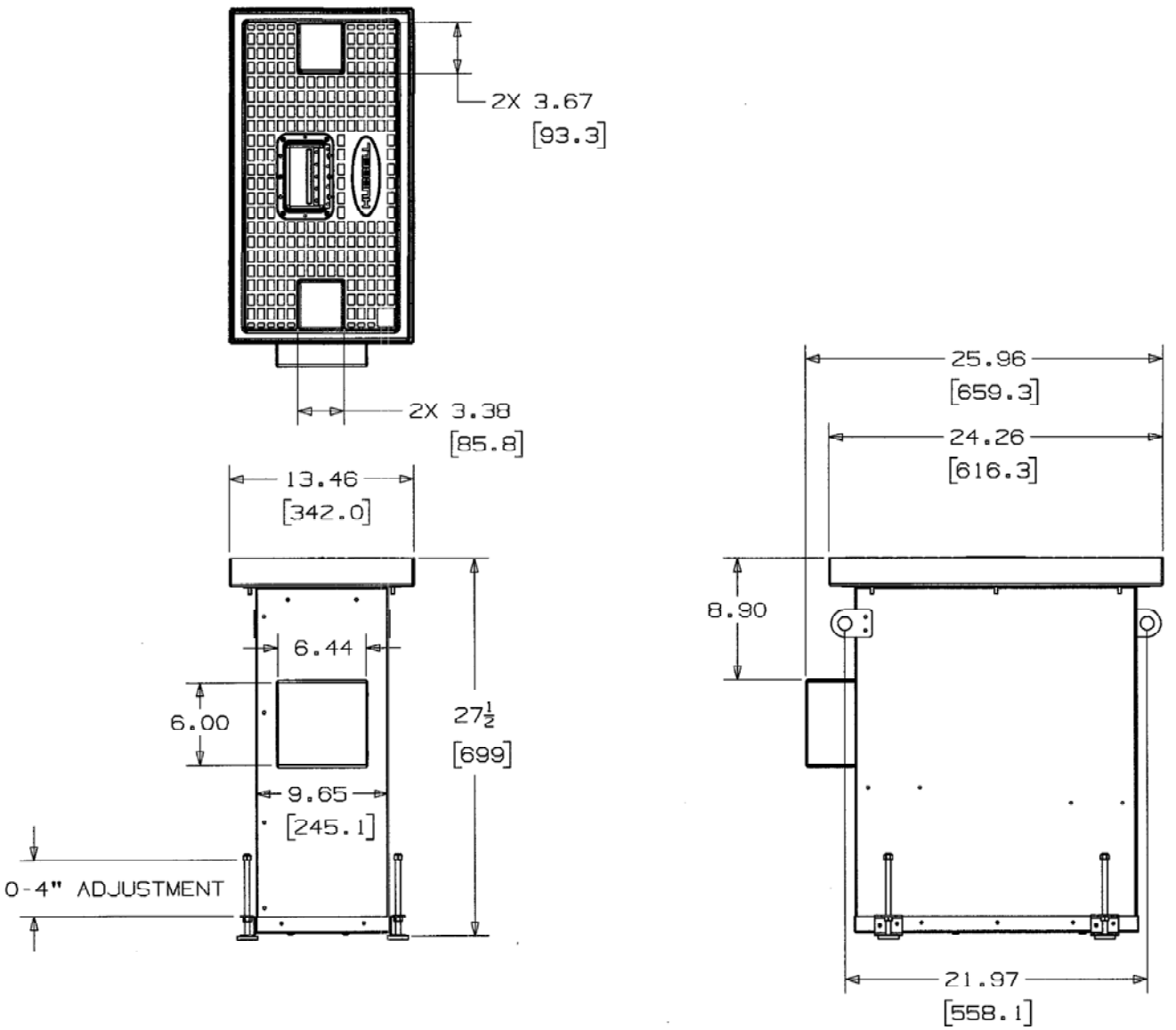

LIST OF PARTS		
DESCRIPTION	MATERIAL	FINISH
COVER ASSEMBLIES	ALUMINUM	CLEAR COAT
BOX	GALV. STEEL/SS	POWDERCOAT OPT.
LEGS	GALV. STEEL/SS	POWDERCOAT OPT.
CONNECTING RAILS	GALV. STEEL/SS	POWDERCOAT OPT.
GASKETS	NEOPRENE	N/A
CONCRETE COVER	GALV. STEEL	N/A

SYM	REVISIONS	APP	DATE
2	ADDED 6.44, 6.00, 8.90 DIMS COVER NOTE, PER DCN 14210	SM	9/19/07
1	RELEASED PER DCN 13666		4/3/07

THE DESIGN AND DIMENSIONS OF THE PRODUCT SHOWN ON THIS DRAWING ARE SUBJECT TO CHANGE WITHOUT NOTICE

TITLE
POWER/DATA BOX
BOX ASSEMBLY
(STANDALONE UNIT)

TOLERANCES UNLESS OTHERWISE SPECIFIED
FRACTIONS ±1/64
DECIMALS ±.005
ANGLES ±2°

WIRING DEVICE-KELLEMS
HUBBELL INCORPORATED
BRIDGEPORT, CT

DR. BY MSS	APP. BY
TR. BY	SCALE 1:8
CHK'D BY	DATE 4/3/07

CODE 74545

DIMENSION SHEET FOR CAT. NO.

REPAIRABLE ☐ NON-REPAIRABLE ☐

B

M-10576

2