Catalog Number:	U6193-YL-QG-AMS
Item Description:	125A 5T HD MISC
UPC Code:	784572721845

Brand Name:	Milbank
Type:	Ringless Meter Socket
Application:	Meter Socket
Standard:	UL Listed
Voltage Rating:	600 Volts Alternating Current
Amperage Rating:	125 Continuous Ampere
Phase:	1 Phase
Frequency Rating:	60 Hertz
Number Of Cutouts:	0
Cable Entry:	Overhead and Underground
Terminal:	Lay in Line Side; Lay in Load Side
Mounting:	Surface Mount
Enclosure:	Type 3R, G90 Galvanized Steel with Powder Coat Finish



Additional Specifications: Number of Jaws:5 Terminal

Utility requirements may vary. Always consult the serving utility for their requirements prior to ordering or installing this equipment. This product must always be installed by a licensed electrician. Installation of this equipment may require local electrical inspector approval.

FEATURE TABLE		
ITEM	QTY	DESCRIPTION
A	4	STD. MNTG. EMBOSS
B	3	3/4 SOLID K.O.
C	1	¼, ½ CONC. K.O.
D	2	1¼, 1½, 2, 2½ CONC. K.O.
E	1	1, 1¼, 1½, 2, 2½, 3 CONC. K.O.
F	1	1¼, 1½, 2, 2½, 3 CONC. K.O.

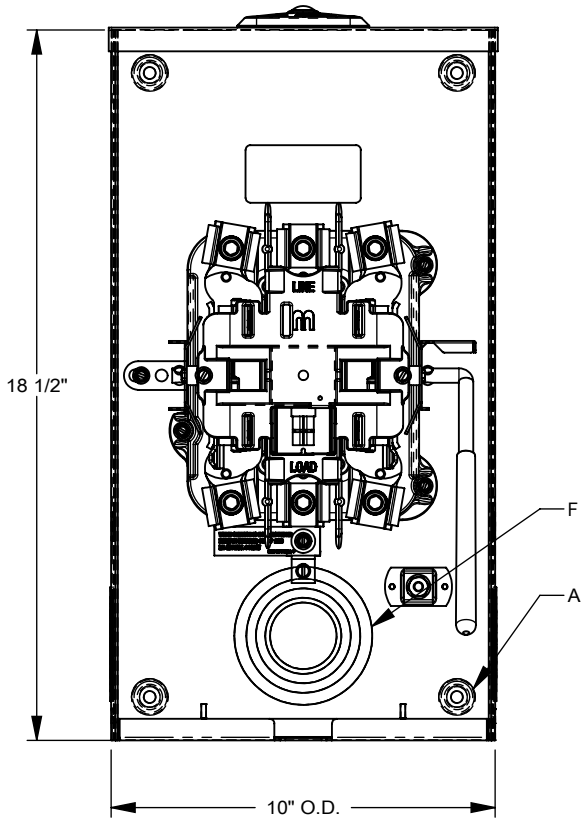

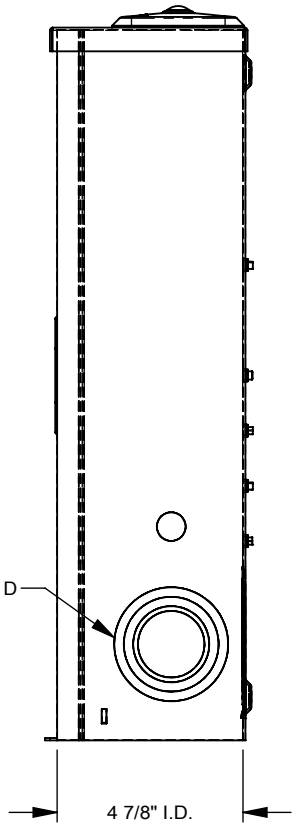

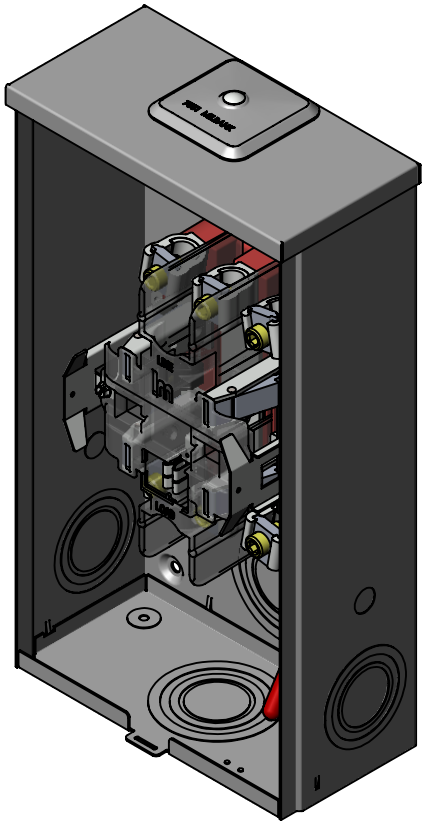

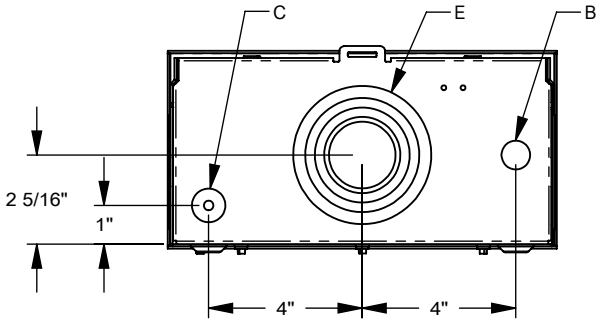

MILBANK®
ENERGY AT WORK

Version:

1

All dimensions are +/- 1/16".
Drawing views are not to scale.

Utility requirements for this equipment may vary. Always consult the serving utility for their requirements prior to ordering or installing this equipment. This product must be installed by a licensed electrician. Installation of this equipment may require local electrical inspector approval.