2-conductor through terminal block

Item No.: 283-901

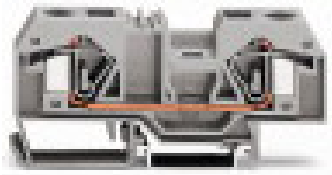

2-conductor through terminal block

Marking

RoHS ✓
Compliant

Business data

Supplier	*WAGO*
Item no.	*283-901*
GTIN / EAN	*4044918297615*
Content	*1*
Order amount	*20*
Customer item number	

Notes

Technical data

Miscellaneous

Total number of connection points	*2*
Total number of potentials	*1*
Color	*gray*
Ratings per	*IEC/EN 60947-7-1*
Rated voltage (III / 3) [V]	*800 [V]*
Rated impulse voltage (III / 3) [kV]	*8 [kV]*

Technical data	
Pollution degree (1)	*3*
Rated current [A]	*76 [A]*
Number of levels	*1*
Connection technology	*CAGE CLAMP®*
Number of connection points connector	*2*
Actuation type	*Operating tool*
Connectable conductor materials	*Copper*
Solid conductor	*0.2 … 16 mm² / 24 … 6 AWG*
Fine-stranded conductor	*0.2 … 16 mm² / 24 … 6 AWG*
Strip length	*16 … 17 mm / 0.63 … 0.67 Inch*
Type of wiring	*Front-entry wiring*
Design	*horizontal*
Marking level	*Center marking*
Insulating material	*Polyamide 66 (PA 66)*
Fire load [MJ]	*0.536 [MJ]*
Weight [g]	*35.588 [g]*
Width	*12 mm / 0.472 Inch*
Height from upper-edge of DIN-35 rail	*37.5 mm / 1.476 Inch*
Depth	*94.5 mm / 3.72 Inch*
Type of mounting	*DIN-35 x 15 carrier rail*

Images & drawings

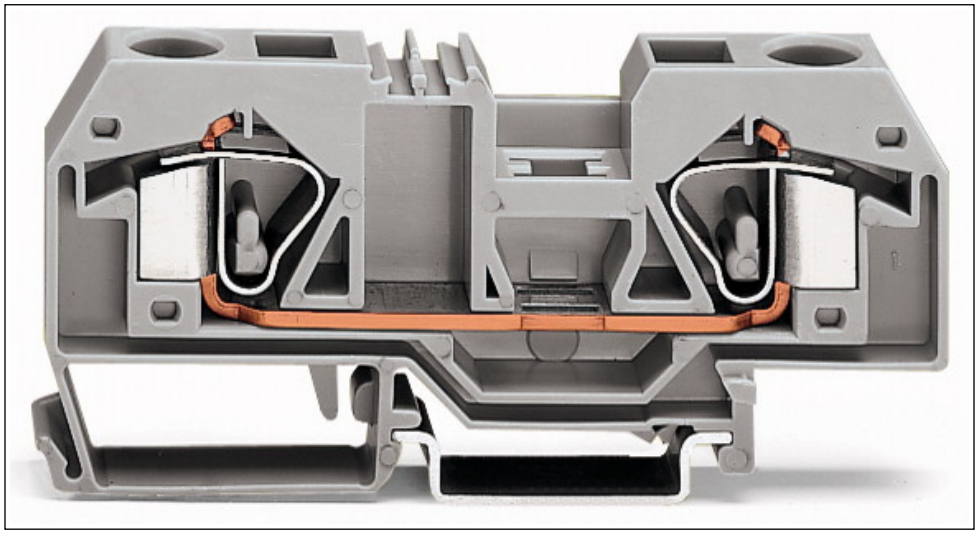

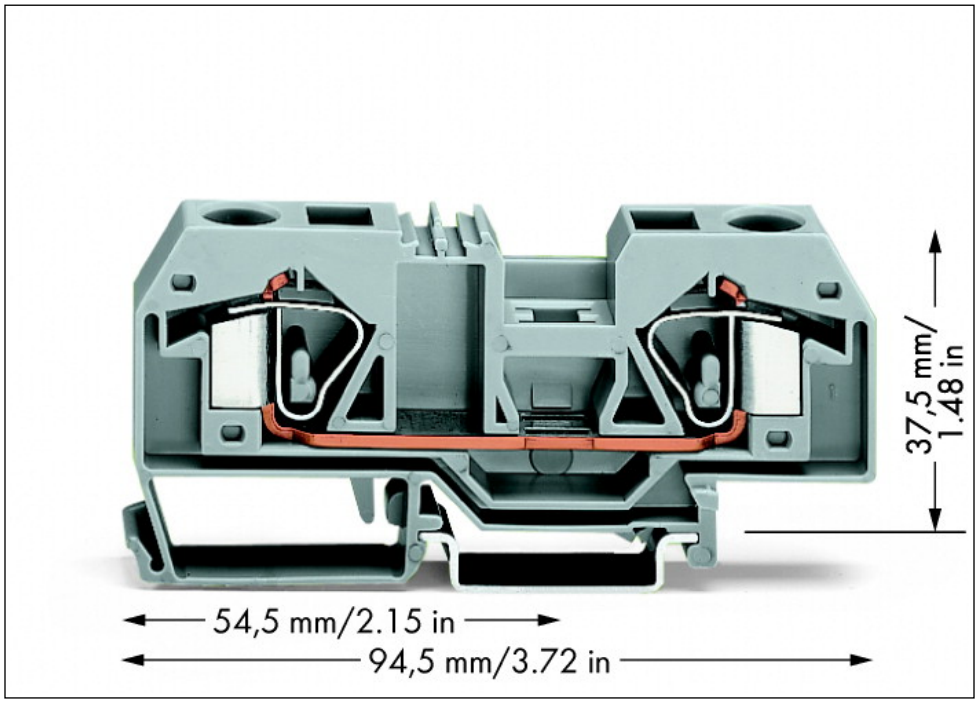

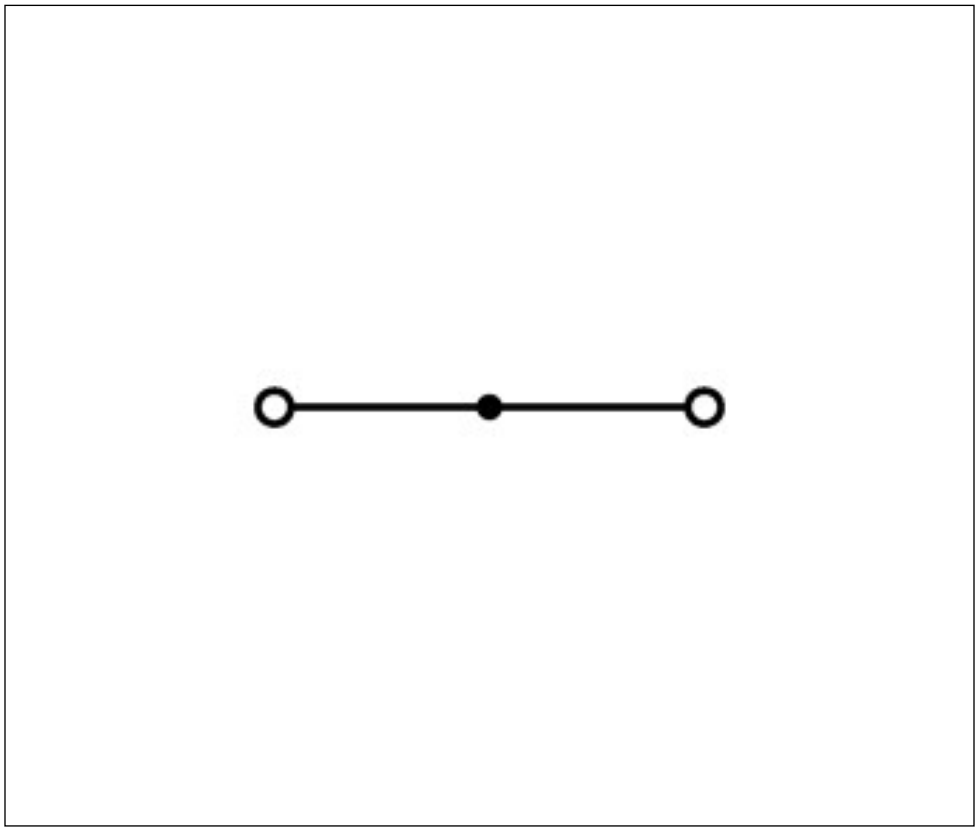

Address

WAGO Kontakttechnik GmbH & Co. KG
Hansastr. 27
32423 Minden
Telefon: 0571/887-0
Fax: 0571/887-169
http://www.wago.com
© WAGO Kontakttechnik GmbH & Co. KG
Technische Änderungen und Irrtümer vorbehalten.