Data Sheet | Item Number: 207-1431

Gelbox; Branch; for cables; with gel; 221 Series; max. 6 mm² connectors; without splicing connectors; Size 1; gray

https://www.wago.com/207-1431



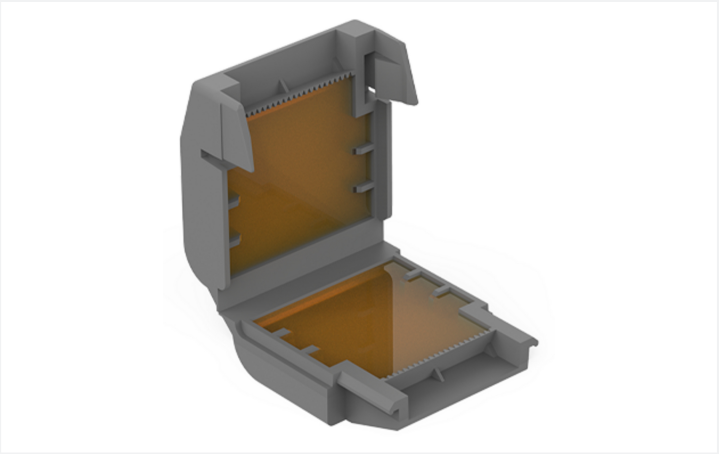

Color: gray

Application Examples
- Bathroom installation (DIN VDE 0100-701)
- Washing facilities/irrigation systems
- Farms and garden centers (DIN VDE 0100-0705)
- Swimming pool areas (DIN VDE 0100-702)
- Parking lot lighting
- Charging stations and lighting systems in ports

Note on Packaging Unit (PU) and Subpackaging Unit (SPU):
If you order a full PU, you will receive our eco-friendly, sustainable cardboard blisters packed in a shelf-ready box.
If you order a quantity smaller than a full PU, you will receive the eco-friendly, sustainable cardboard blisters without a shelf-ready box.

Please refer to the system description for the splicing connectors that can be used.

Your Benefits:
- Easy, fast and safe to use
- Can be used immediately and accessed again later
- Silicon-free
- Label-free
- Suitable for indefinite storage
- The complete system, which consists of gelboxes and WAGO splicing connectors, has been VDE-tested and IPX8-certified.

Connection data

Connection 1

Actuation type	Locking system

Physical data

Width	38 mm / 1.496 inches
Height	21.3 mm / 0.839 inches
Depth	40.1 mm / 1.579 inches

Mechanical data

Design	Size 1
Mounting type	Flying leads
Protection type	IPX8
Suitable	for 6 mm² splicing connectors

Material data

Note (material data)	Information on material specifications can be found here
Color	gray
Housing material	Polypropylene
Fire load	0 MJ
Weight	27.8 g

Environmental requirements

Ambient temperature (operation)	-55 … +85 °C
Ambient temperature (storage)	0 … +40 °C

Commercial data

ETIM 9.0	EC001170
ETIM 8.0	EC001170
PU (SPU)	48 (4) pcs
Packaging type	Box
Country of origin	IT
GTIN	4055144097368
Customs tariff number	85389099990

Environmental Product Compliance

RoHS Compliance Status	Compliant,No Exemption

Approvals / Certificates

General approvals

Approval	Standard	Certificate Name
VDE VDE Prüf- und Zertifizierungsinstitut	EN 60669	400051938

Declarations of conformity and manufacturer's declarations

Approval	Standard	Certificate Name
EU-Declaration of Conformity WAGO GmbH & Co. KG	-	-
UK-Declaration of Conformity WAGO GmbH & Co. KG	-	-

 Continued on next page

Downloads

Environmental Product Compliance

Compliance Search
Environmental Product Compliance 207-1431

Documentation

System Description		
System Description 207 Series Gel boxes	pdf 1156.45 KB	
System Description 207 Series Gel boxes	pdf 1191.37 KB	

Additional Information		
Certificate	pdf 2308.76 KB	
DLG Test Report 7438	pdf 1455.46 KB	

Bid Text		
207-1431	xml 3.58 KB	
207-1431	docx 20.40 KB	

CAD/CAE-Data

CAD data
2D/3D Models 207-1431

Installation Notes

Installation



Open the Gelbox at the side latches.



Place the wired connector in the Gelbox.

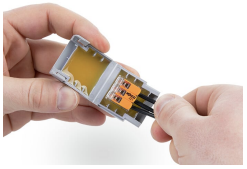

Place the wired connector in the Gelbox.

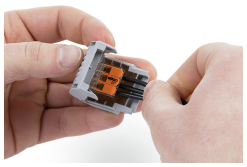

Close the Gelbox.



Close latch securely.



Re-accessible:

- Open the Gelbox.
- Remove the gel.
- Rewire with new components.



Lift the flap and pull the cover perforation forward.



Press in the perforation on the sides.



Tear off the cover from the perforation.



As a counter display: Bend the rear flap at the fold, straighten it and fix it in the cardboard cut-out



If the flap is not required, tear off from the perforation.