Data Sheet | Item Number: 769-176

1-conductor/1-pin carrier terminal block; for DIN-rail 35 x 15 and 35 x 7.5; 4 mm²; CAGE CLAMP®; 4,00 mm²; gray

https://www.wago.com/769-176

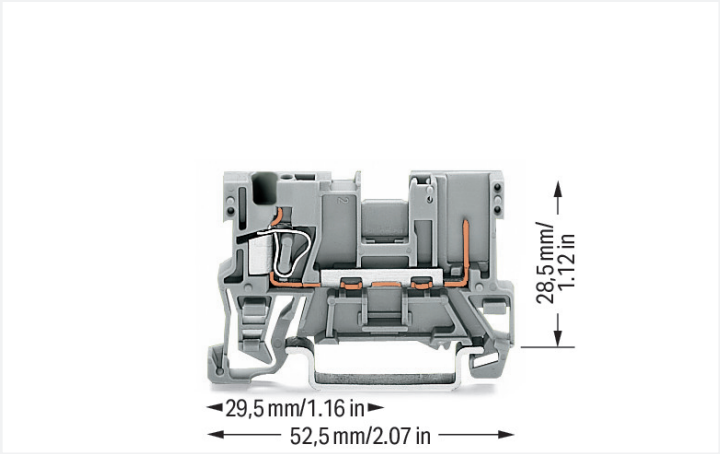

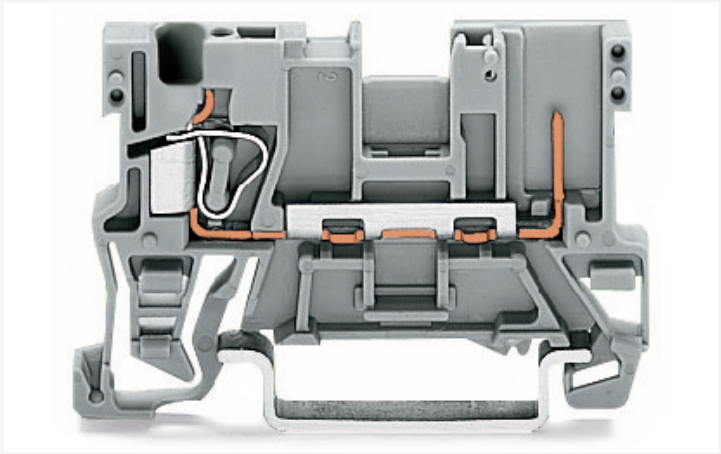

Color: gray

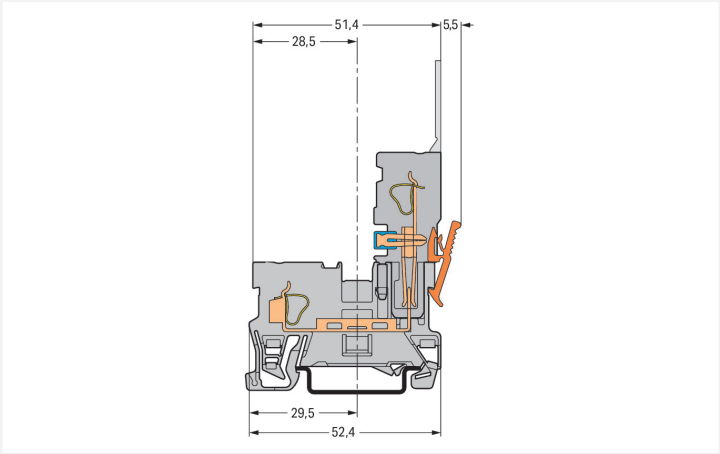

Carrier terminal block

Notes

Safety Information	A separator plate (item no. 209-191) or a 10 mm end stop (item no. 249-117) must be placed at the end of a WAGO X-COM®-SYSTEM terminal strip.

Electrical data

Ratings per	IEC/EN 60947-7-1		
Overvoltage category	III	III	II
Pollution degree	3	2	2
Nominal voltage	500 V	-	-
Rated surge voltage	6 kV	-	-
Rated current	32 A	-	-

Power Loss	
Power loss, per pole (potential)	1.024 W
Rated current I_N for specified power loss	32 A
Resistance value for specified, current-dependent power loss	0.001 Ω

Connection data

Clamping units	1
Total number of potentials	1
Number of levels	1

Connection 1

Connection technology	CAGE CLAMP®
Number of connection points	1
Actuation type	Operating tool
Connectable conductor materials	Copper
Nominal cross-section	4 mm² / 12 AWG
Solid conductor	0.08 … 4 mm² / 28 … 12 AWG
Fine-stranded conductor	0.08 … 4 mm² / 28 … 12 AWG
Strip length	8 … 9 mm / 0.31 … 0.35 inches
Wiring direction	Front-entry wiring

Connection 2

Number of connection points 2	1

Physical data

Width	5 mm / 0.197 inches
Height	52.5 mm / 2.067 inches
Depth from upper-edge of DIN-rail	28.5 mm / 1.122 inches

Mechanical data

Design	horizontal type
Mounting type	DIN-35 rail
Marking level	Center marking

Material data

Note (material data)	Information on material specifications can be found here
Color	gray
Material group	I
Insulation material (main housing)	Polyamide (PA66)
Flammability class per UL94	V0
Fire load	0.101 MJ
Weight	5.3 g

Environmental requirements

Processing temperature	-35 … +85 °C
Continuous operating temperature	-60 … +105 °C

Commercial data

Product Group	18 (X-COM-System)
eCl@ss 10.0	27-14-11-20
eCl@ss 9.0	27-14-11-20
ETIM 8.0	EC000897
ETIM 7.0	EC000897
PU (SPU)	100 pcs
Packaging type	Box
Country of origin	CN
GTIN	4045454871697
Customs tariff number	85366990990

Continued on next page

Environmental Product Compliance

RoHS Compliance Status	Compliant,No Exemption

Approvals / Certificates

General approvals

Approval	Standard	Certificate Name
CCA DEKRA Certification B.V.	EN 60947	NTR NL-7626
CSA CSA Group	C22.2	1101144
KEMA/KEUR DEKRA Certification B.V.	EN 60947	2190419.01
UL Underwriters Laboratories Inc.	UL 1977	E 45171
UR Underwriters Laboratories Inc.	UL 1059	E45172

Declarations of conformity and manufacturer's declarations

Approval	Standard	Certificate Name
EU-Declaration of Conformity WAGO GmbH & Co. KG	-	-
UK-Declaration of Conformity WAGO GmbH & Co. KG	-	-

Approvals for marine applications

Approval	Standard	Certificate Name
ABS American Bureau of Shipping	EN 60947	20-HG1941090-PDA
DNV GL Det Norske Veritas, Germanischer Lloyd	-	TAE00001V2

Downloads

Environmental Product Compliance

Compliance Search

Environmental Product Compliance 769-176

Documentation

Additional Information

Technical Section	pdf 2246.92 KB	

Bid Text

769-176	19.02.2019	xml 3.26 KB	
769-176	02.10.2017	doc 24.50 KB	

CAD/CAE-Data

CAD data

2D/3D Models 769-176

CAE data

EPLAN Data Portal
769-176

WSCAD Universe
769-176

ZUKEN Portal 769-176

1 Compatible Products

1.1 System counterpart

1.1.1 Female connector/socket



Item No.: 769-101/022-000
1-conductor female connector, angled; CAGE CLAMP®; 4 mm²; Pin spacing 5 mm; 1-pole; coding finger; 4,00 mm²; gray



Item No.: 769-110/145-000
1-conductor female connector; CAGE CLAMP®; 4 mm²; Pin spacing 5 mm; 10-pole; coding finger; Centered locking levers; Strain relief plate; 4,00 mm²; gray



Item No.: 769-111/145-000
1-conductor female connector; CAGE CLAMP®; 4 mm²; Pin spacing 5 mm; 11-pole; coding finger; Centered locking levers; Strain relief plate; 4,00 mm²; gray



Item No.: 769-112/145-000
1-conductor female connector; CAGE CLAMP®; 4 mm²; Pin spacing 5 mm; 12-pole; coding finger; Centered locking levers; Strain relief plate; 4,00 mm²; gray



Item No.: 769-113/145-000
1-conductor female connector; CAGE CLAMP®; 4 mm²; Pin spacing 5 mm; 13-pole; coding finger; Centered locking levers; Strain relief plate; 4,00 mm²; gray



Item No.: 769-114/145-000
1-conductor female connector; CAGE CLAMP®; 4 mm²; Pin spacing 5 mm; 14-pole; coding finger; Centered locking levers; Strain relief plate; 4,00 mm²; gray



Item No.: 769-115/145-000
1-conductor female connector; CAGE CLAMP®; 4 mm²; Pin spacing 5 mm; 15-pole; coding finger; Centered locking levers; Strain relief plate; 4,00 mm²; gray



Item No.: 769-101
1-conductor female connector; CAGE CLAMP®; 4 mm²; Pin spacing 5 mm; 1-pole; coding finger; 4,00 mm²; gray



Item No.: 769-101/141-000
1-conductor female connector; CAGE CLAMP®; 4 mm²; Pin spacing 5 mm; 1-pole; coding finger; Centered locking levers; Strain relief plate; 4,00 mm²; gray



Item No.: 769-102/142-000
1-conductor female connector; CAGE CLAMP®; 4 mm²; Pin spacing 5 mm; 2-pole; coding finger; Centered locking levers; Strain relief plate; 4,00 mm²; gray



Item No.: 769-103/142-000
1-conductor female connector; CAGE CLAMP®; 4 mm²; Pin spacing 5 mm; 3-pole; coding finger; Centered locking levers; Strain relief plate; 4,00 mm²; gray



Item No.: 769-104/143-000
1-conductor female connector; CAGE CLAMP®; 4 mm²; Pin spacing 5 mm; 4-pole; coding finger; Centered locking levers; Strain relief plate; 4,00 mm²; gray



Item No.: 769-105/143-000
1-conductor female connector; CAGE CLAMP®; 4 mm²; Pin spacing 5 mm; 5-pole; coding finger; Centered locking levers; Strain relief plate; 4,00 mm²; gray



Item No.: 769-106/144-000
1-conductor female connector; CAGE CLAMP®; 4 mm²; Pin spacing 5 mm; 6-pole; coding finger; Centered locking levers; Strain relief plate; 4,00 mm²; gray



Item No.: 769-107/144-000
1-conductor female connector; CAGE CLAMP®; 4 mm²; Pin spacing 5 mm; 7-pole; coding finger; Centered locking levers; Strain relief plate; 4,00 mm²; gray



Item No.: 769-108/144-000
1-conductor female connector; CAGE CLAMP®; 4 mm²; Pin spacing 5 mm; 8-pole; coding finger; Centered locking levers; Strain relief plate; 4,00 mm²; gray



Item No.: 769-109/144-000
1-conductor female connector; CAGE CLAMP®; 4 mm²; Pin spacing 5 mm; 9-pole; coding finger; Centered locking levers; Strain relief plate; 4,00 mm²; gray



Item No.: 769-121
2-conductor female connector; CAGE CLAMP®; 4 mm²; Pin spacing 5 mm; 1-pole; coding finger; 4,00 mm²; gray

Continued on next page

1.2 Required Accessories

1.2.1 End plate

1.2.1.1 End plate



Item No.: 769-307
End and intermediate plate; 1.1 mm thick; gray



Item No.: 769-308
End and intermediate plate; 1.1 mm thick; orange

1.3 Optional Accessories

1.3.1 Coding

1.3.1.1 Coding



Item No.: 769-435
Coding pin; for coding of female plugs; for carrier terminal blocks / male connectors; orange

1.3.2 Cover

1.3.2.1 Cover



Item No.: 769-438
Pin cover; with marker slot for miniature WSB; gray



Item No.: 769-439
Pin cover; with marker slot for miniature WSB; orange

1.3.3 DIN-rail

1.3.3.1 Mounting accessories



Item No.: 210-196
Aluminum carrier rail; 35 x 8.2 mm; 1.6 mm thick; 2 m long; unslotted; similar to EN 60715; silver-colored



Item No.: 210-198
Copper carrier rail; 35 x 15 mm; 2.3 mm thick; 2 m long; unslotted; according to EN 60715; copper-colored



Item No.: 210-508
Steel carrier rail; 35 x 15 mm; 1.5 mm thick; 2 m long; slotted; galvanized; similar to EN 60715; silver-colored



Item No.: 210-197
Steel carrier rail; 35 x 15 mm; 1.5 mm thick; 2 m long; slotted; similar to EN 60715; silver-colored



Item No.: 210-506
Steel carrier rail; 35 x 15 mm; 1.5 mm thick; 2 m long; unslotted; galvanized; similar to EN 60715; silver-colored



Item No.: 210-114
Steel carrier rail; 35 x 15 mm; 1.5 mm thick; 2 m long; unslotted; similar to EN 60715; silver-colored



Item No.: 210-118
Steel carrier rail; 35 x 15 mm; 2.3 mm thick; 2 m long; unslotted; according to EN 60715; silver-colored



Item No.: 210-115
Steel carrier rail; 35 x 7.5 mm; 1 mm thick; 2 m long; slotted; according to EN 60715; "Hole width 18 mm; silver-colored



Item No.: 210-112
Steel carrier rail; 35 x 7.5 mm; 1 mm thick; 2 m long; slotted; according to EN 60715; "Hole width 25 mm; silver-colored



Item No.: 210-504
Steel carrier rail; 35 x 7.5 mm; 1 mm thick; 2 m long; slotted; galvanized; according to EN 60715; silver-colored



Item No.: 210-113
Steel carrier rail; 35 x 7.5 mm; 1 mm thick; 2 m long; unslotted; according to EN 60715; silver-colored



Item No.: 210-505
Steel carrier rail; 35 x 7.5 mm; 1 mm thick; 2 m long; unslotted; galvanized; according to EN 60715; silver-colored

Continued on next page

1.3.4 Ferrule

1.3.4.1 Ferrule

Item No.: 216-301
Ferrule; Sleeve for 0.25 mm² / AWG 24; insulated; electro-tin plated; yellow

Item No.: 216-302
Ferrule; Sleeve for 0.34 mm² / 22 AWG; insulated; electro-tin plated; light turquoise

Item No.: 216-201
Ferrule; Sleeve for 0.5 mm² / 20 AWG; insulated; electro-tin plated; white



Item No.: 216-101
Ferrule; Sleeve for 0.5 mm² / AWG 22; uninsulated; electro-tin plated; silver-colored

Item No.: 216-202
Ferrule; Sleeve for 0.75 mm² / 18 AWG; insulated; electro-tin plated; gray



Item No.: 216-102
Ferrule; Sleeve for 0.75 mm² / AWG 20; uninsulated; electro-tin plated; silver-colored

Item No.: 216-203
Ferrule; Sleeve for 1 mm² / AWG 18; insulated; electro-tin plated; red



Item No.: 216-103
Ferrule; Sleeve for 1 mm² / AWG 18; uninsulated; electro-tin plated



Item No.: 216-204
Ferrule; Sleeve for 1.5 mm² / AWG 16; insulated; electro-tin plated; black



Item No.: 216-104
Ferrule; Sleeve for 1.5 mm² / AWG 16; uninsulated; electro-tin plated; silver-colored



Item No.: 216-206
Ferrule; Sleeve for 2.5 mm² / AWG 14; insulated; electro-tin plated; blue

1.3.5 Installation

1.3.5.1 Mounting accessories



Item No.: 209-106
Mounting carrier; for isolated mounting on DIN 35 rails; gray



Item No.: 249-116
Screwless end stop; 6 mm wide; for DIN-rail 35 x 15 and 35 x 7.5; gray

1.3.6 Insulation stop

1.3.6.1 Insulation stop



Item No.: 769-470
Insulation stop; 0.08 - 0.2 mm² "s" (0.14 mm² "f-st"); 5 pieces/strip; white



Item No.: 769-471
Insulation stop; 0.25 - 0.5 mm²; 5 pieces/strip; light gray



Item No.: 769-472
Insulation stop; 0.75 - 1 mm²; 5 pieces/strip; dark gray

1.3.7 Jumper

1.3.7.1 Jumper

Item No.: 280-402
Jumper; insulated; gray



Item No.: 280-409
Jumper; insulated; gray



Item No.: 780-452
Staggered jumper; from 1 to 2; insulated; gray



Item No.: 780-453
Staggered jumper; from 1 to 3; insulated; gray

Item No.: 780-454
Staggered jumper; from 1 to 4; insulated; gray



Item No.: 780-455
Staggered jumper; from 1 to 5; insulated; gray



Item No.: 780-456
Staggered jumper; from 1 to 6; insulated; gray



Item No.: 780-457
Staggered jumper; from 1 to 7; insulated; gray



Item No.: 780-458
Staggered jumper; from 1 to 8; insulated; gray

Continued on next page

1.3.8 Marking

1.3.8.1 Marker



Item No.: 2009-145
Mini-WSB Inline; for Smart Printer; 1700 pieces on roll; stretchable 5 - 5.2 mm; plain; snap-on type; white



Item No.: 248-501
Mini-WSB marking card; as card; not stretchable; plain; snap-on type; white

1.3.9 Protective warning marker

1.3.9.1 Cover



Item No.: 280-415
Protective warning marker; for 5 terminal blocks; with high-voltage symbol, black; yellow

1.3.10 Push-in type wire jumper

1.3.10.1 Jumper



Item No.: 249-126
Push-in type wire jumper; 0.75 mm²; insulated; 110 mm long; black



Item No.: 249-123
Push-in type wire jumper; 0.75 mm²; insulated; 180 mm long; black



Item No.: 249-127
Push-in type wire jumper; 0.75 mm²; insulated; 250 mm long; black



Item No.: 249-125
Push-in type wire jumper; insulated; 60 mm long; black

1.3.11 Test and measurement

1.3.11.1 Testing accessories



Item No.: 280-419
Spacer module; modular; bridging commoned terminal blocks; gray



Item No.: 280-404
Test plug adapter; 5 mm wide; for test plug (2.3 mm Ø); suitable for 1.5 mm² - 4 mm² tbs; gray



Item No.: 280-418
Test plug module; modular; suitable for all WAGO 280 and 780 Series rail-mounted terminal blocks with jumper slots in the current bar; gray



Item No.: 210-136
Test plug; 2 mm Ø; with 500 mm cable; red

1.3.12 Tool

1.3.12.1 Operating tool



Item No.: 210-720
Operating tool; Blade: 3.5 x 0.5 mm; with a partially insulated shaft; multicoloured

Installation Notes

Installation

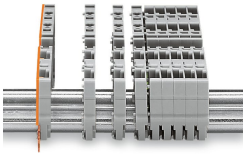

Snap individual carrier terminal blocks onto the DIN-rail and slide together.

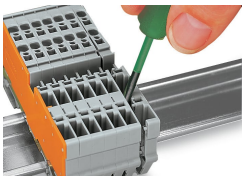

Open the assembly by laterally sliding a block via operating tool and remove terminal block via release lever.

Conductor termination

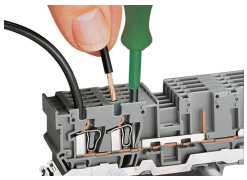

CAGE CLAMP® connection
Carrier terminal block: Insert/remove conductor via operating tool (3.5 x 0.5 mm blade).

Commoning

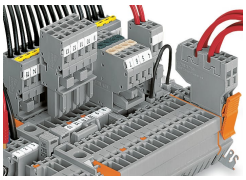

Commoning with adjacent or staggered jumpers.
Push jumpers down until fully inserted.

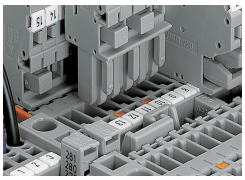

Commoning carrier terminal blocks via staggered jumpers.

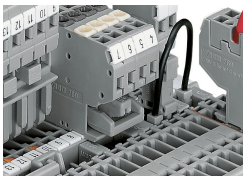

Commoning a 2-conductor female plug via staggered jumper and carrier terminal blocks via adjacent jumpers.

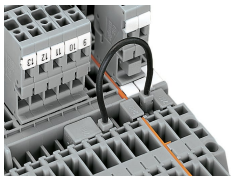

Commoning carrier terminal blocks via push-in type wire jumpers or adjacent jumpers – even over an intermediate plate.

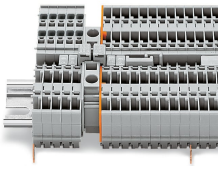

Commoning “supply terminal blocks” (up to 10 mm²/8 AWG) with carrier terminal blocks via step-down jumpers.

Coding

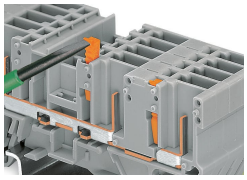

Snap coding pin in proper direction on carrier terminal block.
Shown: Coding pin removal from carrier terminal block.

Locking system

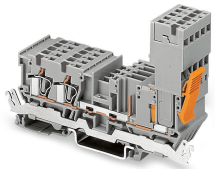

Securing a female plug via locking lever on the terminal block side.

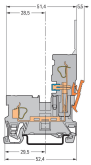

Carrier terminal block

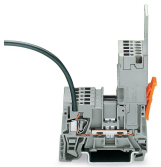

1-conductor female plug
Carrier terminal blocks can be commoned via 280 and 780 Series Jumpers and tested using a test plug adapter (280-4..).



2-conductor female plug
Carrier terminal blocks can only be commoned via 280 Series Adjacent and Alternate Jumpers.



1-conductor/1-pin carrier terminal block
1-connector female plug, straight*
*1-conductor angled female plug is also possible!