Data Sheet | Item Number: 2206-8033

Distribution terminal block; with push-button; 1 x 6 mm² / 6 x 1.5 mm²; with integrated end plate; suitable for Ex e II applications; side and center marking; for DIN-rail 35 x 15 and 35 x 7.5; Push-in CAGE CLAMP®; 6,00 mm²; red

https://www.wago.com/2206-8033

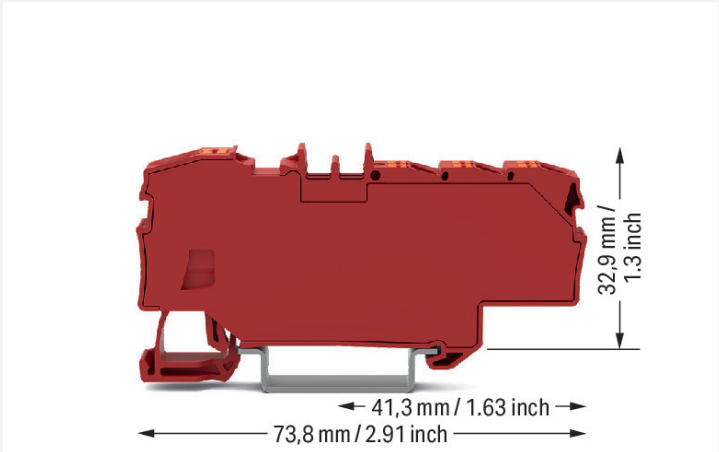

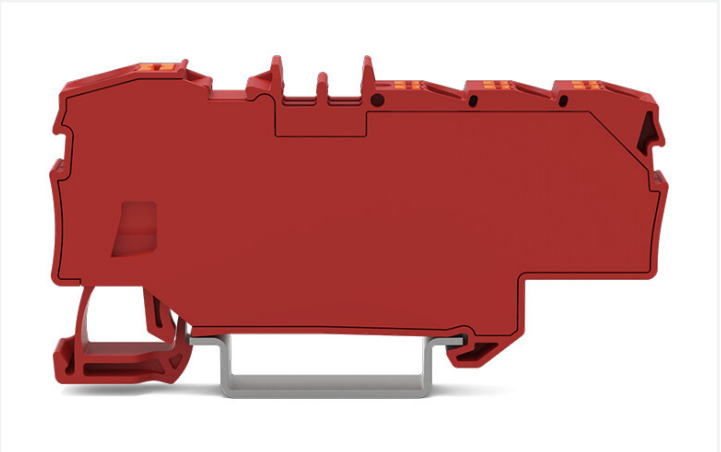

Color: red

Electrical data

Ratings per	IEC/EN 60947-7-1		
Overvoltage category	III	III	II
Pollution degree	3	2	2
Nominal voltage	800 V	-	-
Rated surge voltage	8 kV	-	-
Rated current	41 A	-	-
Current at conductor cross-section (max.) mm²	57 A	-	-

Power Loss	
Power loss, per pole (potential)	1.3112 W
Rated current I_N for specified power loss	41 A
Resistance value for specified, current-dependent power loss	0.00078 Ω

Connection data

Connection points	7
Total number of potentials	1
Number of levels	1
Number of jumper slots	2

Connection 1

Connection type 1	Input
Connection technology	Push-in CAGE CLAMP®
Number of connection points	1
Actuation type	Push-button
Connectable conductor materials	Copper
Nominal cross-section	6 mm²
Solid conductor	0.5 … 10 mm² / 20 … 8 AWG
Solid conductor; push-in termination	2.5 … 10 mm² / 14 … 8 AWG
Fine-stranded conductor	0.5 … 10 mm² / 20 … 8 AWG
Fine-stranded conductor; with insulated ferrule	0.5 … 6 mm² / 20 … 10 AWG
Fine-stranded conductor; with ferrule; push-in termination	2.5 … 6 mm² / 16 … 10 AWG
Note (conductor cross-section)	Depending on the conductor characteristic, a conductor with a smaller cross-section can also be inserted via push-in termination.
Strip length	13 … 15 mm / 0.51 … 0.59 inches
Wiring direction	Front-entry wiring

Connection 2

Connection type 2	Output
Connection technology 2	Push-in CAGE CLAMP®
Number of connection points 2	6
Nominal cross-section 2	1.5 mm²
Solid conductor 2	0.25 … 2.5 mm² / 22 … 14 AWG
Solid conductor; push-in termination 2	0.75 … 2.5 mm² / 18 … 14 AWG
Fine-stranded conductor 2	0.25 … 2.5 mm² / 22 … 14 AWG
Fine-stranded conductor; with insulated ferrule 2	0.25 … 1.5 mm² / 22 … 16 AWG
Fine-stranded conductor; with ferrule; push-in termination; 2	0.75 … 1.5 mm² / 18 … 16 AWG
Strip length 2	9 … 11 mm / 0.35 … 0.43 inches

Physical data

Width	9 mm / 0.354 inches
Height	73.8 mm / 2.905 inches
Depth from upper-edge of DIN-rail	32.9 mm / 1.295 inches

Mechanical data

Mounting type	DIN-35 rail
Marking level	Center/side marking

Material data

Note (material data)	Information on material specifications can be found here
Color	red
Material group	I
Insulation material	Polyamide (PA66)
Flammability class per UL94	V0
Clamping spring material	Chrome-nickel spring steel (CrNi)
Contact plating	Tin
Fire load	0.366 MJ
Actuator color	orange
Weight	16.3 g

Environmental requirements

Processing temperature	-35 … +85 °C
Continuous operating temperature	-60 … +105 °C

Commercial data

ETIM 8.0	EC000897
ETIM 7.0	EC000897
PU (SPU)	12 pcs
Country of origin	DE
GTIN	4066966185812
Customs tariff number	85369010000

Continued on next page

Environmental Product Compliance

RoHS Compliance Status	Compliant,No Exemption

Approvals / Certificates

General approvals

Approval	Standard	Certificate Name
CCA DEKRA Certification B.V.	EN 60947	NTR NL-7957
KEMA/KEUR DEKRA Certification B.V.	EN 60947	71-125861
UL Underwriters Laboratories Inc.	C22.2 No. 158	E45172

Approvals for hazardous areas

Approval	Standard	Certificate Name
AEx Underwriters Laboratories Inc.	UL 60079	E 185892 (AEx eb IIC, Ex eb IIC)
CCCEx CQST/CNEx	GB/T 3836.3	2020312313000171

Downloads

Documentation

Additional Information

Technical Section	pdf 2240.62 KB	

CAD/CAE-Data

CAD data	CAE data
2D/3D Models 2206-8033	EPLAN Data Portal 2206-8033

1 Compatible Products

1.1 Optional Accessories

1.1.1 DIN-rail

1.1.1.1 Mounting accessories



Item No.: 210-196
Aluminum carrier rail; 35 x 8.2 mm; 1.6 mm thick; 2 m long; unslotted; similar to EN 60715; silver-colored



Item No.: 210-198
Copper carrier rail; 35 x 15 mm; 2.3 mm thick; 2 m long; unslotted; according to EN 60715; copper-colored



Item No.: 210-197
Steel carrier rail; 35 x 15 mm; 1.5 mm thick; 2 m long; slotted; similar to EN 60715; silver-colored



Item No.: 210-114
Steel carrier rail; 35 x 15 mm; 1.5 mm thick; 2 m long; unslotted; similar to EN 60715; silver-colored



Item No.: 210-118
Steel carrier rail; 35 x 15 mm; 2.3 mm thick; 2 m long; unslotted; according to EN 60715; silver-colored



Item No.: 210-115
Steel carrier rail; 35 x 7.5 mm; 1 mm thick; 2 m long; slotted; according to EN 60715; "Hole width 18 mm; silver-colored



Item No.: 210-112
Steel carrier rail; 35 x 7.5 mm; 1 mm thick; 2 m long; slotted; according to EN 60715; "Hole width 25 mm; silver-colored



Item No.: 210-113
Steel carrier rail; 35 x 7.5 mm; 1 mm thick; 2 m long; unslotted; according to EN 60715; silver-colored

Continued on next page

1.1.2 Ferrule

1.1.2.1 Ferrule

Item No.: 216-262
Ferrule; Sleeve for 0.75 mm² / 18 AWG; insulated; electro-tin plated; electrolytic copper; gastight crimped; acc. to DIN 46228, Part 4/09.90; gray



Item No.: 216-263
Ferrule; Sleeve for 1 mm² / AWG 18; insulated; electro-tin plated; electrolytic copper; gastight crimped; acc. to DIN 46228, Part 4/09.90; red



Item No.: 216-264
Ferrule; Sleeve for 1.5 mm² / AWG 16; insulated; electro-tin plated; electrolytic copper; gastight crimped; acc. to DIN 46228, Part 4/09.90; black



Item No.: 216-266
Ferrule; Sleeve for 2.5 mm² / AWG 14; insulated; electro-tin plated; electrolytic copper; gastight crimped; acc. to DIN 46228, Part 4/09.90; blue



Item No.: 216-267
Ferrule; Sleeve for 4 mm² / AWG 12; insulated; electro-tin plated; electrolytic copper; gastight crimped; acc. to DIN 46228, Part 4/09.90; gray



Item No.: 216-208
Ferrule; Sleeve for 6 mm² / AWG 10; insulated; electro-tin plated; electrolytic copper; gastight crimped; acc. to DIN 46228, Part 4/09.90; yellow

1.1.3 Installation

1.1.3.1 Cover

Item No.: 709-156
Cover; Type 3; suitable for cover carrier, type 3; 1 m long; transparent

1.1.3.2 Cover carrier



Item No.: 709-169
Cover carrier; Type 3; incl. fixing/retaining screws and knurled nut; suitable for 279 to 282 and 880 Series rail-mounted terminal blocks; suitable for 264 Series miniature rail-mounted terminal blocks; suitable for 270 Series sensor and actuator terminal blocks; gray

1.1.4 Jumper

1.1.4.1 Jumper



Item No.: 2001-402
Jumper; 2-way; insulated; light gray



Item No.: 2001-403
Jumper; 3-way; insulated; light gray



Item No.: 2001-404
Jumper; 4-way; insulated; light gray

1.1.5 Marking

1.1.5.1 Group marker carrier



Item No.: 2009-191
Group marker carrier; gray



Item No.: 2009-192
Group marker carrier; gray



Item No.: 2009-193
Group marker carrier; gray

1.1.5.2 Marker



Item No.: 2009-145/000-006
Mini-WSB Inline; for Smart Printer; 1700 pieces on roll; stretchable 5 - 5.2 mm; plain; snap-on type; blue



Item No.: 2009-145/000-007
Mini-WSB Inline; for Smart Printer; 1700 pieces on roll; stretchable 5 - 5.2 mm; plain; snap-on type; gray



Item No.: 2009-145/000-023
Mini-WSB Inline; for Smart Printer; 1700 pieces on roll; stretchable 5 - 5.2 mm; plain; snap-on type; green



Item No.: 2009-145/000-012
Mini-WSB Inline; for Smart Printer; 1700 pieces on roll; stretchable 5 - 5.2 mm; plain; snap-on type; orange



Item No.: 2009-145/000-005
Mini-WSB Inline; for Smart Printer; 1700 pieces on roll; stretchable 5 - 5.2 mm; plain; snap-on type; red



Item No.: 2009-145/000-024
Mini-WSB Inline; for Smart Printer; 1700 pieces on roll; stretchable 5 - 5.2 mm; plain; snap-on type; violet



Item No.: 2009-145
Mini-WSB Inline; for Smart Printer; 1700 pieces on roll; stretchable 5 - 5.2 mm; plain; snap-on type; white



Item No.: 2009-145/000-002
Mini-WSB Inline; for Smart Printer; 1700 pieces on roll; stretchable 5 - 5.2 mm; plain; snap-on type; yellow



Item No.: 248-501/000-006
Mini-WSB marking card; as card; not stretchable; plain; snap-on type; blue



Item No.: 248-501/000-007
Mini-WSB marking card; as card; not stretchable; plain; snap-on type; gray



Item No.: 248-501/000-023
Mini-WSB marking card; as card; not stretchable; plain; snap-on type; green



Item No.: 248-501/000-017
Mini-WSB marking card; as card; not stretchable; plain; snap-on type; light green



Item No.: 248-501/000-012
Mini-WSB marking card; as card; not stretchable; plain; snap-on type; orange



Item No.: 248-501/000-005
Mini-WSB marking card; as card; not stretchable; plain; snap-on type; red



Item No.: 248-501/000-024
Mini-WSB marking card; as card; not stretchable; plain; snap-on type; violet



Item No.: 248-501
Mini-WSB marking card; as card; not stretchable; plain; snap-on type; white



Item No.: 248-501/000-002
Mini-WSB marking card; as card; not stretchable; plain; snap-on type; yellow



Item No.: 793-5501/000-006
WMB marking card; as card; for terminal block width 5 - 17.5 mm; stretchable 5 - 5.2 mm; plain; snap-on type; blue



Item No.: 793-5501/000-007
WMB marking card; as card; for terminal block width 5 - 17.5 mm; stretchable 5 - 5.2 mm; plain; snap-on type; gray



Item No.: 793-5501/000-023
WMB marking card; as card; for terminal block width 5 - 17.5 mm; stretchable 5 - 5.2 mm; plain; snap-on type; green



Item No.: 793-5501/000-017
WMB marking card; as card; for terminal block width 5 - 17.5 mm; stretchable 5 - 5.2 mm; plain; snap-on type; light green



Item No.: 793-5501/000-012
WMB marking card; as card; for terminal block width 5 - 17.5 mm; stretchable 5 - 5.2 mm; plain; snap-on type; orange



Item No.: 793-5501/000-005
WMB marking card; as card; for terminal block width 5 - 17.5 mm; stretchable 5 - 5.2 mm; plain; snap-on type; red



Item No.: 793-5501/000-024
WMB marking card; as card; for terminal block width 5 - 17.5 mm; stretchable 5 - 5.2 mm; plain; snap-on type; violet

Item No.: 793-5501
WMB marking card; as card; for terminal block width 5 - 17.5 mm; stretchable 5 - 5.2 mm; plain; snap-on type; white



Item No.: 793-5501/000-002
WMB marking card; as card; for terminal block width 5 - 17.5 mm; stretchable 5 - 5.2 mm; plain; snap-on type; yellow



Item No.: 793-501/000-006
WMB marking card; as card; not stretchable; plain; snap-on type; blue

Item No.: 793-501/000-007
WMB marking card; as card; not stretchable; plain; snap-on type; gray



Item No.: 793-501/000-023
WMB marking card; as card; not stretchable; plain; snap-on type; green



Item No.: 793-501/000-017
WMB marking card; as card; not stretchable; plain; snap-on type; light green



Item No.: 793-501/000-012
WMB marking card; as card; not stretchable; plain; snap-on type; orange



Item No.: 793-501/000-005
WMB marking card; as card; not stretchable; plain; snap-on type; red



Item No.: 793-501/000-024
WMB marking card; as card; not stretchable; plain; snap-on type; violet

Item No.: 793-501
WMB marking card; as card; not stretchable; plain; snap-on type; white



Item No.: 793-501/000-002
WMB marking card; as card; not stretchable; plain; snap-on type; yellow



Item No.: 2009-115/000-006
WMB-Inline; for Smart Printer; 1500 pieces on roll; stretchable 5 - 5.2 mm; plain; snap-on type; blue



Item No.: 2009-115/000-007
WMB-Inline; for Smart Printer; 1500 pieces on roll; stretchable 5 - 5.2 mm; plain; snap-on type; gray

Item No.: 2009-115/000-023
WMB-Inline; for Smart Printer; 1500 pieces on roll; stretchable 5 - 5.2 mm; plain; snap-on type; green

Item No.: 2009-115/000-017
WMB-Inline; for Smart Printer; 1500 pieces on roll; stretchable 5 - 5.2 mm; plain; snap-on type; light green

Item No.: 2009-115/000-012
WMB-Inline; for Smart Printer; 1500 pieces on roll; stretchable 5 - 5.2 mm; plain; snap-on type; orange

Continued on next page

1.1.5.2 Marker



Item No.: 2009-115/000-024
WMB-Inline; for Smart Printer; 1500 pieces on roll; stretchable 5 - 5.2 mm; plain; snap-on type; violet



Item No.: 2009-115
WMB-Inline; for Smart Printer; 1500 pieces on roll; stretchable 5 - 5.2 mm; plain; snap-on type; white



Item No.: 2009-115/000-002
WMB-Inline; for Smart Printer; 1500 pieces on roll; stretchable 5 - 5.2 mm; plain; snap-on type; yellow

1.1.5.3 Marker carrier



Item No.: 2009-198
Adaptor; gray

1.1.5.4 Marking strip



Item No.: 2009-110
Marking strips; for Smart Printer; on reel; not stretchable; plain; snap-on type; white

1.1.6 Screwless end stop

1.1.6.1 Mounting accessories



Item No.: 249-117
Screwless end stop; 10 mm wide; for DIN-rail 35 x 15 and 35 x 7.5; gray



Item No.: 249-116
Screwless end stop; 6 mm wide; for DIN-rail 35 x 15 and 35 x 7.5; gray

1.1.7 Terminal blocks

1.1.7.1 Through terminal block



Item No.: 2201-1301
3-conductor through terminal block; with push-button; 1.5 mm²; with test port; side and center marking; for DIN-rail 35 x 15 and 35 x 7.5; Push-in CAGE CLAMP®; 1,50 mm²; gray



Item No.: 2201-1401
4-conductor through terminal block; with push-button; 1.5 mm²; with test port; side and center marking; for DIN-rail 35 x 15 and 35 x 7.5; Push-in CAGE CLAMP®; 1,50 mm²; gray

1.1.8 Test and measurement

1.1.8.1 Testing accessories

Item No.: 2009-174
Test plug adapter; for 4 mm Ø test plugs; for testing TOPJOB®S rail-mounted terminal blocks; gray



Item No.: 210-136
Test plug; 2 mm Ø; with 500 mm cable; red



Item No.: 2009-182
Testing tap; for max. 2.5 mm²; tool-free connection for individual test wires 0.08 - 2.5 mm; gray

1.1.9 Tool

1.1.9.1 Operating tool



Item No.: 210-719
Operating tool; Blade: 2.5 x 0.4 mm; with a partially insulated shaft



Item No.: 210-721
Operating tool; Blade: 5.5 x 0.8 mm; with a partially insulated shaft; multicoloured

Installation Notes

Application

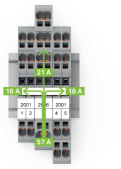

Commoning options for the 2006 Series Distribution Terminal Blocks and 2001 Series Terminal Blocks using 2001 Series Jumpers
Note:
The total current of the outgoing circuits must not exceed the nominal current of the push-in type jumper bar.

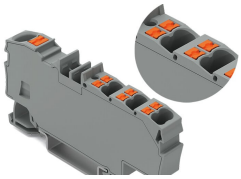

A clear marking of clamping units is molded in.

Application

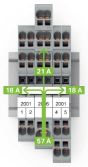

Commoning options for the 2006 Series Distribution Terminal Blocks and 2001 Series Terminal Blocks using 2001 Series Jumpers
Note:
The total current of the outgoing circuits must not exceed the nominal current of the push-in type jumper bar.

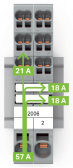

Commoning options for the 2006 Series Distribution Terminal Blocks and 2001 Series Terminal Blocks using 2001 Series Jumpers
Note:
The total current of the outgoing circuits must not exceed the nominal current of the push-in type jumper bar.

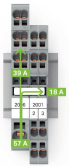

Commoning options for the 2006 Series Distribution Terminal Blocks and 2001 Series Terminal Blocks using 2001 Series Jumpers
Note:
The total current of the outgoing circuits must not exceed the nominal current of the push-in type jumper bar.