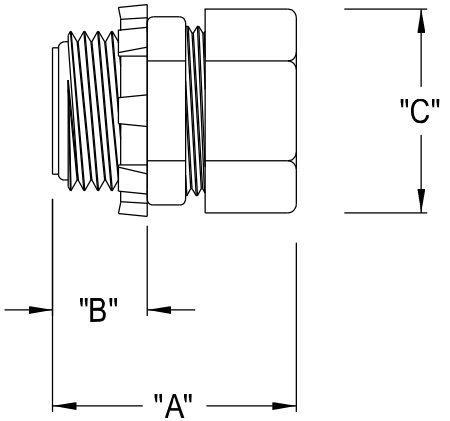

PART NO.	TRADE SIZE	"A"	"B"	"C"
829A	4"	3.023	1.068	5.397
828A	3 1/2"	2.923	1.068	4.841
827A		3.013	1.103	4.141
826A	2 1/2"	2.896	.935	4.125
825A	2"	2.072	.743	2.921
824A	1 1/2"	2.041	.816	2.398
823A	1 1/4"	2.057	.733	2.105
822A	1"	1.584	.633	1.604
821A	3/4"	1.479	.583	1.519
820A	1/2"	1.293	.493	1.093