

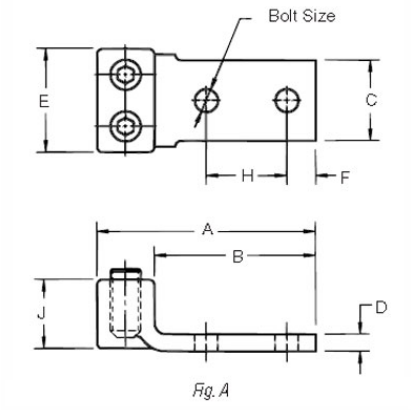

Fig. A

Locktite Connectors
T&B Catalog Number:

32005BD

UPC Number: 78621083940

Status: Active

Description:

Locktite Copper Double-Barrel Lug for Conductor Range 8-4 AWG

Features

	Easy installation. High conductivity. Wide cable range.
	Screw tightening. Serrated saddle. Built-in lock-washer.

General

Style	Double-Barrel Lug
Material	Copper
Wire Range	8-4 AWG

Dimension Information

A (inches)	2 1/2
B (inches)	2
C (inches)	1
D (inches)	1/8
E (inches)	1
F (inches)	9/32
G (inches)	1/4
H (inches)	5/8
J (inches)	17/32

Packaging

Package in Units	10
T&B Sold in UOM	Each
T&B Weight Per UOM	20 lbs. per 100

Application Support

T&B Instruction Sheets	ta00846-tb2
Recommended Tightening Torque	Available on Website

Notes

	With Filister Head Screw.

Certifications

RoHS Compliance	Yes

Certifications

File Nbr:
E9809

For further technical assistance, please contact us...

Thomas & Betts - USA
8155 T&B Blvd.
Memphis, TN 38125
www.tnb.com

T&B Technical Support
MS 3B-50
8155 T&B Blvd.
Memphis, TN 38125

Hours: 7AM - 6PM CDT
Monday-Friday
Phone: (888) 862-3289
Fax: (901) 252-1321
Email:techsupport@tnb.com