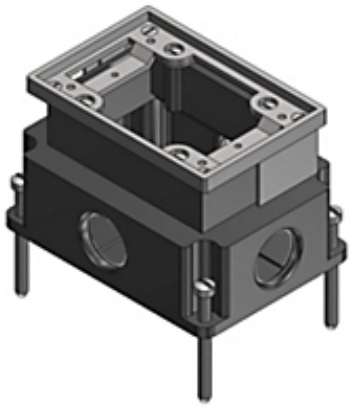

Representative

Catalog Number:	**SP6411AL**
Product ID:	7TAA003050R0011
UPC Number:	78599169200
EAN Number:	05415022341652
Status:	Active

Single Gang Flush Service Floor Box, 35 Cubic Inches, Length 4-1/2 Inches, Width 3 Inches, 1 Inch Conduit Hubs, Cast Iron with Aluminum Trim, For Power, Communications, and Data

- Cast iron watertight body and painted silver enamel inside and out for additional corrosion resistance
- Interior and exterior leveling screws permit adjustment to finished floor with removable partitions for large capacity requirements on 2, 3 and 4 gang.
- Shipped complete with expendable cap to prevent ingress of concrete during pour.

Header

3D Model	Available on Website

North American Specifications (UNSPSC)

UNSPSC	39121307 Floor boxes
IGCC	4432 Floor boxes
Brand Name	Steel City
Type	Flush Service
Special Features	Fully adjustable
Application	Ideal for the modern office with workstations that have power, communications and data equipment
Material	Cast Iron

European Specifications (ETIM)

ETIM	EC000024 Installation box for underfloor-installation
Cover model	Rectangular
Suitable for wet cleaning	N
Suitable for hollow floor	Y
Material	Aluminium
With opening carpeting	N
Min. built-in depth	92.075mm
Colour	Other
Length external dimension	114.3mm
Width outside dimension	244.475mm

Packaging

Inner Quantity	1
Outer Quantity	4
Outer Dimensions (inches)	11.4x9.5x6.7
Weight Uom	4.29 lbs. Each

Documents / Support Tools

Technical Data Sheet CA	Available on Website

For further technical assistance, please contact us...

Thomas & Betts - USA
8155 T&B Blvd.
Memphis, TN 38125
www.tnb.com

T&B Technical Support
MS 3B-50
8155 T&B Blvd.
Memphis, TN 38125

Hours: 7AM - 6PM CDT
Monday-Friday
Phone: (888) 862-3289
Fax: (901) 252-1321
Email:techsupport@tnb.com