LITHONIA LIGHTING®

Catalog Number	
Notes	
Type	

LDN4

4" OPEN
Non-IC
New Construction Downlight

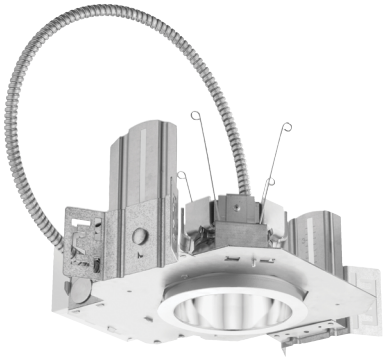

FEATURES & SPECIFICATIONS

INTENDED USE — Typical applications include corridors, lobbies, conference rooms and private offices.

CONSTRUCTION — Galvanized steel mounting/plaster frame; galvanized steel junction box with bottom-hinged access covers and spring latches. Reflectors are retained by torsion springs.

Vertically adjustable mounting brackets with commercial bar hangers provide 3-3/4" total adjustment.

Two combination 1/2"-3/4" and four 1/2" knockouts for straight-through conduit runs. Capacity: 8 (4 in, 4 out). No. 12 AWG conductors, rated for 90°C.

Accommodates 12"-24" joist spacing.

Passive cooling thermal management for 25°C standard; high ambient (40°C) option available. Light engine and drivers are accessible from above or below ceiling.

Max ceiling thickness 1-1/2".

OPTICS — LEDs are binned to a 3-step SDCM; 80 CRI minimum. 90 CRI optional.

LED light source concealed with diffusing optical lens.

General illumination lighting with 1.0 S/MH and 55° cutoff to source and source image.

Self-flanged anodized reflectors in specular, semi-specular, or matte diffuse finishes. Also available in white and black painted reflectors.

ELECTRICAL — Multi-volt (120-277V, 50/60Hz) 0-10V dimming drivers mounted to junction box, 10% or 1% minimum dimming level available.

0-10V dimming fixture requires two (2) additional low-voltage wires to be pulled.

70% lumen maintenance at 60,000 hours.

LISTINGS — Certified to US and Canadian safety standards. Wet location standard (covered ceiling). IP55 rated. ENERGY STAR® certified product.

WARRANTY — 5-year limited warranty. Complete warranty terms located at:
www.acuitybrands.com/CustomerResources/Terms_and_conditions.aspx

Note: Actual performance may differ as a result of end-user environment and application.

All values are design or typical values, measured under laboratory conditions at 25 °C.

Specifications subject to change without notice.

battery pack

A+ Capable options indicated by this color background.

ORDERING INFORMATION

Lead times will vary depending on options selected. Consult with your sales representative.

Example: LDN4 35/15 LO4AR LSS MVOLT EZ1

LDN4													
Series		**Color temperature**		**Lumens**[1]		**Aperture/Trim Color**				**Finish**		**Voltage**	
LDN4	4" round	27/	2700K	05	500 lumens	LO4	Downlight	AR	Clear	LSS	Semi-specular	MVOLT	Multi-volt
		30/	3000K	07	750 lumens	LW4	Wallwash	WR[2]	White	LD	Matte diffuse	120	120V
		35/	3500K	10	1000 lumens			BR[2]	Black	LS	Specular	277	277V
		40/	4000K	15	1500 lumens							347[3]	347V
		50/	5000K	20	2000 lumens								
				25	2500 lumens								
				30	3000 lumens								
				40	4000 lumens								

Driver		**Options**			
GZ10	0-10V driver dims to 10%	SF[4]	Single fuse	N80[8]	nLight™ Lumen Compensation
GZ1	0-10V driver dims to 1%	TRW[6]	White painted flange	NPS80EZ[7,10]	nLight® dimming pack controls 0-10V eldoLED drivers (EZ10, EZ1).
EZ10	0-10V eldoLED driver with smooth and flicker-free deep dimming performance down to 10%	TRBL[6]	Black painted flange	NPS80EZER[7,10]	nLight® dimming pack controls 0-10V eldoLED drivers (EZ10, EZ1). ER controls fixtures on emergency circuit.
EZ1	0-10V eldoLED driver with smooth and flicker-free deep dimming performance down to 1%	EL[5]	Emergency battery pack with integral test switch. 10W Constant Power, Not Certified in CA Title 20 MAEDBS	HAO[11]	High ambient option (40°C)
		ELR[5]	Emergency battery pack with remote test switch. 10W Constant Power, Not Certified in CA Title 20 MAEDBS	CP[12]	Chicago Plenum
		ELSD[5]	Emergency battery pack with self-diagnostics, 10W Constant Power, integral test switch. Not Certified in CA Title 20 MAEDBS	RRL__	RELOC®-ready luminaire connectors enable a simple and consistent factory installed option across all ABL luminaire brands. Refer to RRL for complete nomenclature. Available only in RRLA, RRLB, RRLAE, and RRLC12S.
		ELRSD[5]	Emergency battery pack with self-diagnostics, 10W Constant Power, remote test switch. Not Certified in CA Title 20 MAEDBS	NLTAIR2[8,9]	nLight® Air enabled
		E10WCP[5]	Emergency battery pack, 10W Constant Power with integral test switch. Certified in CA Title 20 MAEDBS	NLTAIRER2[9,10]	nLight® AIR Dimming Pack Wireless Controls. Controls fixtures on emergency circuit, not available with battery pack options
		E10WCPR[5]	Emergency battery pack, 10W Constant Power with remote test switch. Certified in CA Title 20 MAEDBS	USPOM	US point of manufacture
		NPP16D[7,10]	nLight® network power/relay pack with 0-10V dimming for non-eldoLED drivers (GZ10, GZ1).	90CRI	High CRI (90+)
		NPP16DER[7,10]	nLight® network power/relay pack with 0-10V dimming for non-eldoLED drivers (GZ10, GZ1). ER controls fixtures on emergency circuit.		

Notes

1 Overall height varies based on lumen package; refer to dimensional chart on page 3.
2 Not available with finishes.
3 Not available with emergency options.
4 Must specify voltage 120V or 277V.
5 12.5" of plenum depth or top access required for battery pack maintenance.
6 Available with clear (AR) reflector only.
7 Specify voltage. ER for use with generator supply EM power. Will require an emergency hot feed and normal hot feed.
8 Fixture begins at 80% light level. Must be specified with NPS80EZ or NPS80EZ ER. Only available with EZ10 and EZ1 drivers.
9 Not available with CP, NPS80EZ, NPS80EZER, NPP16D, NPP16DER or N80 options.
10 NLTAIR2 and NLTAIRER2 not recommended for metal ceiling installations.
11 Fixture height is 5-11/16" for all lumen packages with HAO.
12 Must specify voltage for 3000lm. Not available with emergency battery pack option.

LDN4

PHOTOMETRY

Distribution Curve | **Distribution Data** | **Output Data** | **Coefficient of Utilization** | **Illuminance Data at 30" Above Floor for a Single Luminaire**

LDN4 35/10 LO4AR, input watts: 10.58, delivered lumens: 1085.2, LM/W = 102.57, spacing criterion at 0= 1.04, test no. ISF 30712P229.

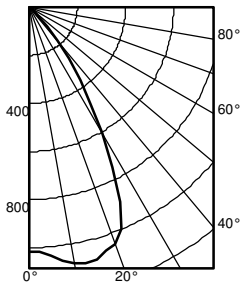

	Ave	Lumens
0	1017	
5	1039	101
15	1084	304
25	895	395
35	369	232
45	52	51
55	1	2
65	1	1
75	0	0
85	0	0
90	0	

Zone	Lumens	% Lamp
0° - 30°	799.7	73.7
0° - 40°	1031.5	95.1
0° - 60°	1084.7	100.0
0° - 90°	1085.2	100.0
90° - 120°	0.0	0.0
90° - 130°	0.0	0.0
90° - 150°	0.0	0.0
90° - 180°	0.0	0.0
0° - 180°	1085.2	*100.0

*Efficiency

pf	20%								
pc	80%			70%			50%		
pw	50%	30%	10%	50%	30%	10%	50%	30%	10%
0	119	119	119	116	116	116	111	111	111
1	111	108	106	109	107	105	105	103	101
2	103	99	96	102	98	95	98	95	93
3	96	92	88	95	91	87	92	89	86
4	90	85	81	89	84	80	87	83	79
5	85	79	75	84	78	74	82	77	74
6	79	73	69	79	73	69	77	72	68
7	75	69	64	74	68	64	73	68	64
8	70	64	60	70	64	60	69	63	60
9	66	60	56	66	60	56	65	60	56
10	63	57	53	62	57	53	61	56	53

		50% beam - 55.6°		10% beam - 78.0°	
Mounting Height	Inital FC Center Beam	Diameter	FC	Diameter	FC
8.0	33.6	5.8	16.8	8.9	3.4
10.0	18.1	7.9	9.0	12.2	1.8
12.0	11.3	10.0	5.6	15.4	1.1
14.0	7.7	12.1	3.8	18.6	0.8
16.0	5.6	14.2	2.8	21.9	0.6

LDN4 35/15 LO4AR, input watts: 17.5, delivered lumens: 1570.1, LM/W = 89.72, spacing criterion at 0= 1.04, test no. ISF 30712P234.

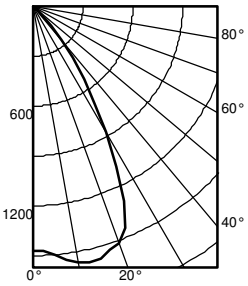

	Ave	Lumens
0	1472	
5	1503	146
15	1569	440
25	1295	571
35	534	335
45	75	74
55	1	3
65	1	1
75	0	0
85	0	0
90	0	

Zone	Lumens	% Lamp
0° - 30°	1157.1	73.7
0° - 40°	1492.5	95.1
0° - 60°	1569.4	100.0
0° - 90°	1570.1	100.0
90° - 120°	0.0	0.0
90° - 130°	0.0	0.0
90° - 150°	0.0	0.0
90° - 180°	0.0	0.0
0° - 180°	1570.1	*100.0

*Efficiency

pf	20%								
pc	80%			70%			50%		
pw	50%	30%	10%	50%	30%	10%	50%	30%	10%
0	119	119	119	116	116	116	111	111	111
1	111	108	106	109	107	105	105	103	101
2	103	99	96	102	98	95	98	95	93
3	96	92	88	95	91	87	92	89	86
4	90	85	81	89	84	80	87	83	79
5	85	79	75	84	78	74	82	77	74
6	79	73	69	79	73	69	77	72	68
7	75	69	64	74	68	64	73	68	64
8	70	64	60	70	64	60	69	63	60
9	66	60	56	66	60	56	65	60	56
10	63	57	53	62	57	53	61	56	53

		50% beam - 55.6°		10% beam - 78.0°	
Mounting Height	Inital FC Center Beam	Diameter	FC	Diameter	FC
8.0	48.7	5.8	24.3	8.9	4.9
10.0	26.2	7.9	13.1	12.2	2.6
12.0	16.3	10.0	8.2	15.4	1.6
14.0	11.1	12.1	5.6	18.6	1.1
16.0	8.1	14.2	4.0	21.9	0.8

LDN4 35/30 LO4AR, input watts: 32.1, delivered lumens: 3122.6, LM/W = 88.52, spacing criterion at 0= 1.04, test no. ISF 30712P249.

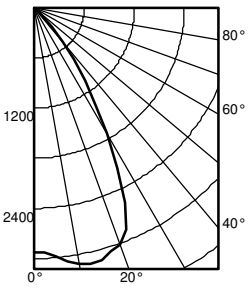

	Ave	Lumens
0	2927	
5	2989	290
15	3120	875
25	2575	1136
35	1062	667
45	149	148
55	3	5
65	2	1
75	0	0
85	0	0
90	0	

Zone	Lumens	% Lamp
0° - 30°	2301.2	73.7
0° - 40°	2968.2	95.1
0° - 60°	3121.1	100.0
0° - 90°	3122.6	100.0
90° - 120°	0.0	0.0
90° - 130°	0.0	0.0
90° - 150°	0.0	0.0
90° - 180°	0.0	0.0
0° - 180°	3122.6	*100.0

*Efficiency

pf	20%								
pc	80%			70%			50%		
pw	50%	30%	10%	50%	30%	10%	50%	30%	10%
0	119	119	119	116	116	116	111	111	111
1	111	108	106	109	107	105	105	103	101
2	103	99	96	102	98	95	98	95	93
3	96	92	88	95	91	87	92	89	86
4	90	85	81	89	84	80	87	83	79
5	85	79	75	84	78	74	82	77	74
6	79	73	69	79	73	69	77	72	68
7	75	69	64	74	68	64	73	68	64
8	70	64	60	70	64	60	69	63	60
9	66	60	56	66	60	56	65	60	56
10	63	57	53	62	57	53	61	56	53

		50% beam - 55.6°		10% beam - 78.0°	
Mounting Height	Inital FC Center Beam	Diameter	FC	Diameter	FC
8.0	96.8	5.8	48.4	8.9	9.7
10.0	52.0	7.9	26.0	12.2	5.2
12.0	32.4	10.0	16.2	15.4	3.2
14.0	22.1	12.1	11.1	18.6	2.2
16.0	16.1	14.2	8.0	21.9	1.6

Accessories: *Order as separate catalog numbers (shipped separately).*

SCA4	Sloped ceiling adapter. Degree of slope must be specified (5D, 10D, 15D, 20D, 25D, 30D). Refer to TECH-190.

© 2015-2019 Acuity Brands Lighting, Inc. All rights reserved.

LDN4

* All dimensions are inches (centimeters) unless otherwise noted.

LDN4 500-1500 LUMEN

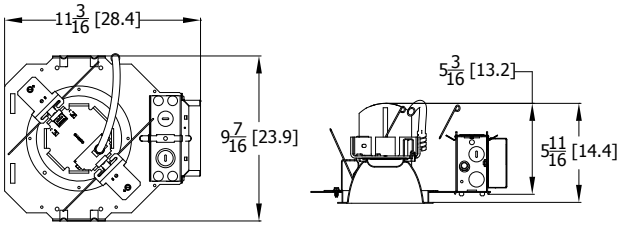

Aperture: 4-5/16 (11)
Ceiling Opening: 5-1/8 (13)
Overlap trim: 5-7/16 (13.8)

LDN4 2000-3000 LUMEN

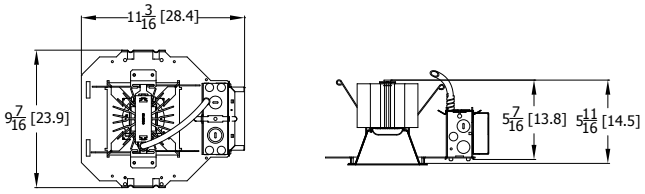

Aperture: 4-5/16 (11) Square
Ceiling Opening: 5-1/8 (13) Square
Overlap trim: 5-7/16 (13.8) Square

LDN4 CP

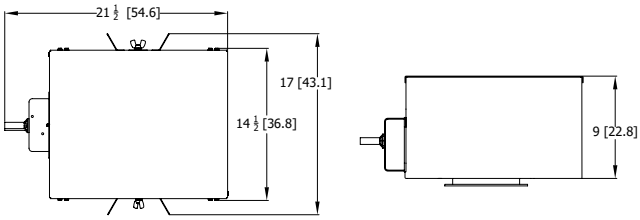

Aperture: 4-5/16? (11)
Ceiling Opening: 5-1/8? (13)
Overlap trim: 5-7/16? (13.8)

LDN4 EL-ELR

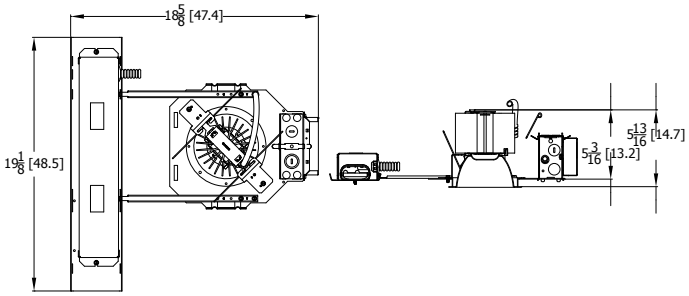

Aperture: 4-5/16 (11)
Ceiling Opening: 5-1/8 (13)
Overlap trim: 5-7/16 (13.8)

LDN4			
Nominal	**Lumens**	**Wattage**	**Lm/W**
500	523.6	5.74	91.2
750	751.1	8.6	87.3
1000	1045	10.58	98.8
1500	1512	17.5	86.4
2000	2006	22.12	90.7
2500	2551	26.1	97.7
3000	3007	32.1	93.7
4000	4212	43	98.0

LUMEN OUTPUT MULTIPLIERS - CCT					
	2700K	**3000K**	**3500K**	**4000K**	**5000K**
80CRI	0.950	0.966	1.000	1.025	1.101

HOW TO ESTIMATE DELIVERED LUMENS IN EMERGENCY MODE

Use the formula below to estimate the delivered lumens in emergency mode

Delivered Lumens = 1.25 x P x LPW

P = Ouput power of emergency driver. P = 10W for PS1055CP

LPW = Lumen per watt rating of the luminaire. This information is available on the ABL luminaire spec sheet.
The LPW rating is also available at Designlight Consortium.

LUMEN OUTPUT MULTIPLIERS - FINISH			
	Clear (AR)	**White (WR)**	**Black (BR)**
Specular (LS)	1.0	N/A	N/A
Semi-specular (LSS)	0.950	N/A	N/A
Matte diffuse (LD)	0.85	N/A	N/A
Painted	N/A	0.87	0.73

Notes

- Tested in accordance with IESNA LM-79-08.
- Tested to current IES and NEMA standards under stabilized laboratory conditions.
- CRI: 80 typical.

© 2015-2019 Acuity Brands Lighting, Inc. All rights reserved.

ADDITIONAL DATA

COMPATIBLE 0-10V WALL-MOUNT DIMMERS		
MANUFACTURER	PART NO.	POWER BOOSTER AVAILABLE
Lutron®	Diva® DVTV	
	Diva® DVSCTV	
	Nova T® NTFTV	
	Nova® NFTV	
Leviton®	AWSMT-7DW	CN100
	AWSMG-7DW	PE300
	AMRMG-7DW	
	Leviton Centura Fluorescent Control System	
	IllumaTech® IP7 Series	
Synergy®	ISD BC	RDMFC
	SLD LPCS	
	Digital Equinox (DEQ BC)	
Douglas Lighting Controls	WPC-5721	
Entertainment Technology	Tap Glide TG600FAM120 (120V)	
	Tap Glide Heatsink TGH1500FAM120 (120V)	
	Oasis 0A2000FAMU	
Honeywell	EL7315A1019	EL7305A1010 (optional)
	EL7315A1009	
HUNT Dimming	Preset slide: PS-010-IV and PS-010-WH	
	Preset slide: PS-010-3W-IV and PS-010-3W-WH	
	Preset slide, controls FD-010: PS-IFC-010-IV and PS-IFC-010-WH-120/277V	
	Preset slide, controls FD-010: PS-IFC-010-3W-IV and PS-IFC-010-3W-WH-120/277V	
	Remote mounted unit: FD-010	
Lehigh Electronic Products	Solitaire	PBX
PDM Electrical Products	WPC-5721	
Starfield Controls	TR61 with DALI interface port	RT03 DALInet Router
WattStopper®	LS-4 used with LCD-101 and LCD-103	

A+ Capable Luminaire

This item is an A+ capable luminaire, which has been designed and tested to provide consistent color appearance and out-of-the-box control compatibility with simple commissioning.

- All configurations of this luminaire meet the Acuity Brands' specification for chromatic consistency
- This luminaire is part of an A+ Certified solution for nLight® control networks when ordered with drivers marked by a shaded background*
- This luminaire is part of an A+ Certified solution for nLight control networks, providing advanced control functionality at the luminaire level, when selection includes driver and control options marked by a shaded background*

To learn more about A+, visit www.acuitybrands.com/aplus.

*See ordering tree for details

© 2015-2019 Acuity Brands Lighting, Inc. All rights reserved.

LDN4

EXAMPLE
Group Fixture Control*
*Appiication diagram applies for fixtures with eldoLED drivers only.

nPS 80 EZ Dimming/Control Pack (qty: 2 required)
nPODM 2P DX Dual On/Off/Dim Push-Button WallPod
nCM ADCX Daylight Sensor with Automatic Dimming Control
nCM PDT 9 Dual Technology Occupancy Sensor

Description: This design provides a dual on/off/dim wall station that enables manual control of the fixtures in Row A and Row B separately. Additionally, a daylight harvesting sensor is provided so the lights in Row B can be configured to dim automatically when daylight is available. An occupancy sensor turns off all lights when the space is vacant.

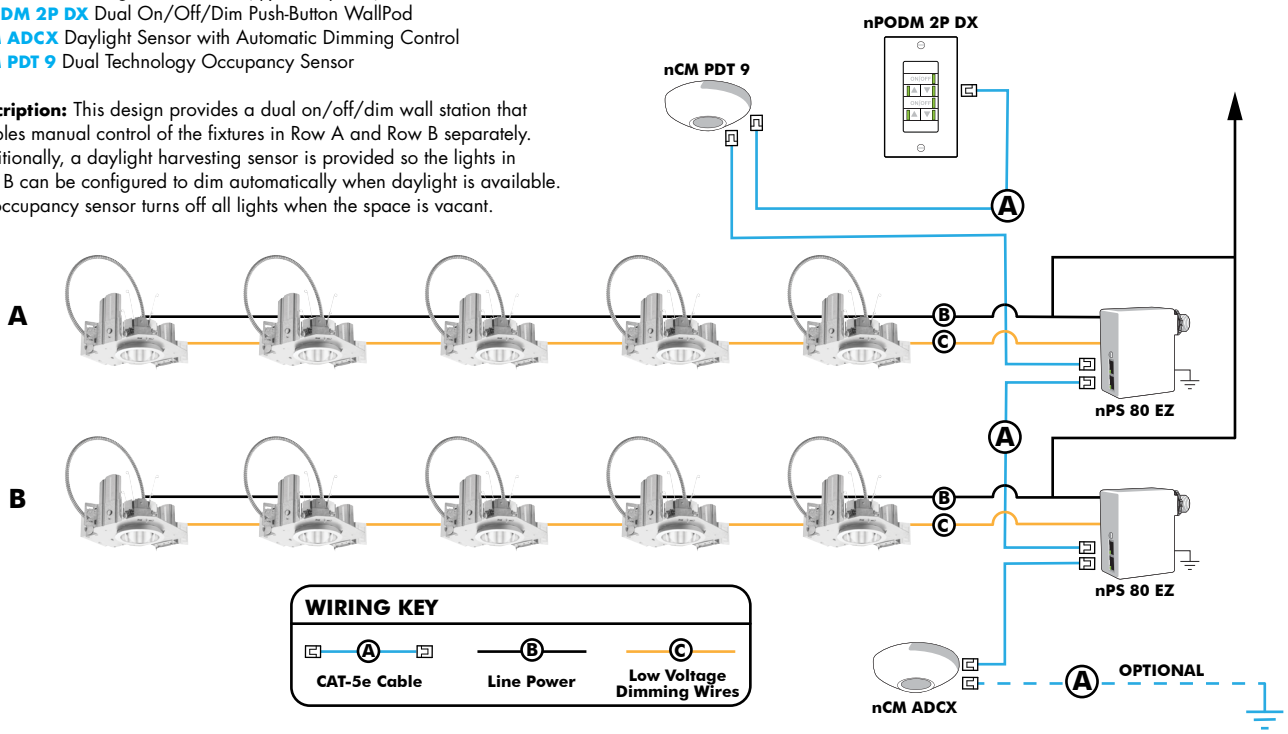

Choose Wall Controls
nLight offers multiple styles of wall controls - each with varying features and user experience.



Push-Button Wallpod
Traditional tactile buttons and LED user feedback



Graphic Wallpod
Full color touch screen provides a sophisticated look and feel

nLight® Wired Controls Accessories:			
Order as separate catalog number. Visit www.acuitybrands.com/products/controls/nlight for complete listing of nLight controls.			
WallPod Stations	**Model number**	**Occupancy sensors**	**Model Number**
On/Off	nPODM (Color)	Small motion 360º, ceiling (PIR/dual Tech)	nCM 9 / nCM PDT 9
On/Off & Raise/Lower	nPOD DX (Color)	Large motion 360º, ceiling (PIR/dual tech)	nCM 10 / nCM PDT 10
Graphic Touchscreen	nPOD GFX (Color)	Wide View (PIR/dual tech)	nWV 16 / nWV PDT 16
Photocell controls	**Model Number**	Wall Switch w/ Raise/Lower (PIR/dual tech)	nWSX LV DX / nWSX PDT LV DX
Dimming	nCM ADCX	**Cat-5 cables (plenum rated)**	**Model Number**
		10', CAT5 10FT	CAT5 10FT J1
		15, CAT5 15FT	CAT5 15FT J1

nLight® AIR Control Accessories: *Order as separate catalog number. Visit www.acuitybrands.com/products/controls/nlightair.*	
Wall switches	**Model number**
On/Off single pole	rPODB [color]
On/Off two pole	rPODB 2P [color]
On/Off & raise/lower single pole	rPODB DX [color]
On/Off & raise/lower two pole	rPODB 2P DX [color]
On/Off & raise/lower single pole	rPODBZ DX WH[1]

Notes
1 Can only be ordered with the RES7Z zone control sensor version.

nLight AIR
nLight AIR is the ideal solution for retrofit or new construction spaces where adding communication is cost prohibitive. The integrated nLight AIR rPP20 Power Pack is part of each Lithonia LDN Luminaire. These individually addressable controls offer the ultimate in flexibility during initial setup and for space repurposing.

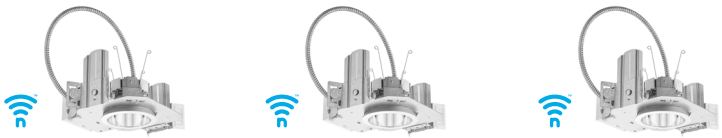

Simple as 1,2,3

1. Install the nLight® AIR fixtures with embedded smart sensor
2. Install the wireless battery-powered wall switch
3. With CLAIRITY app, pair the fixtures with the wall switch and if desired, customize the sensor settings for the desired outcome



© 2015-2019 Acuity Brands Lighting, Inc. All rights reserved.