2530-IG



Color: Orange

UPC Code: 07847707727

Country Of Origin: United States

NEMA: L23-20R



Brand Features

Leviton's Industrial Grade Locking Devices are built to provide unparalleled quality and superior performance in the most severe industrial settings. Leviton combines the best materials available with superior production standards to produce a broad selection of Locking Devices of unmatched flexibility and dependability.

Item Description

20 Amp, 347/600 Volt 3PY, NEMA L23-20R, 4P, 5W, Flush Mtg Locking Receptacle, Industrial Grade, Isolated Ground - ORANGE

Technical Information

AC Horsepower Ratings

At Rated Voltage: 5 HP

Electrical Specifications

Dielectric Voltage: Withstands 2000V per UL498

Current Limiting: Full Rated Current

Temperature Rise: Max 30C after 250 cycles OL at 200 percent rated current

Phase: 3-Phase WYE

Environmental Specifications

Flammability: Rated V-2 per UL 94

Operating Temperature: -40°C to 60°C

Environment: Corrosive

Material Specifications

Face Material: Nylon

Base Material: Nylon

Line Contacts: Brass .040 Thick

Terminal Screws: Brass 10-32

Grounding Screw: Chromated Brass

Clamp Nuts: Nickel-Plated Brass

Strap Material: Nickel-Plated Brass

Body Material: Valox 357

Cover Material: Valox 357

Ground Clips: Nickel-Plated Brass

Terminal Clamps: Zinc-Plated Brass

Ground Contacts: Brass

Mechanical Specifications

Terminal ID: Brass-Hot, Green-Ground, White-Neutral

Terminal Accom.: 14-8 AWG

Product ID: Ratings and NEMA I.D. permanently marked on device

Product Features

Grounding: Isolated Ground

Feature: Isolated Ground

Amperage: 20 A

Voltage: 347/600 VAC

NEMA: L23-20R

Pole: 4

Wire: 5

Termination: Back & Side

Face Material: Nylon

Base Material: Nylon

Strap Material: Nickel-Plated Brass

Color: Orange

Standards and Certifications: UL/CSA

Warranty: Lifetime Limited

Brand: V-0-Max

Standards and Certifications

NEMA: WD-6

ANSI: C-73

NOM: 057

UL: 498

UL Fed Spec: W-C-596

CSA: C22.2 No. 42

Warranty

Warranty: Lifetime Limited

Dimensional Diagram

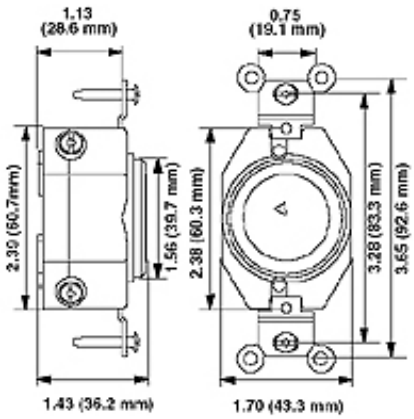

Wiring Diagram

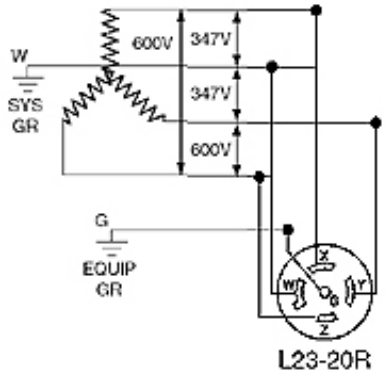

SPECIFICATION SUBMITTAL

JOB NAME:	CATALOG NUMBERS:	
JOB NUMBER:		

Leviton Manufacturing Co., Inc.
201 North Service Road, Melville, NY 11747
Teléfono: +1-800-323-8920 · FAX: +1-800-832-9538 · Tech Line (8:30AM-7:30PM E.S.T. Monday-Friday): +1-800-824-3005

Leviton Manufacturing of Canada, Ltd.
165 Hymus Boulevard, Pointe Claire, Quebec H9R 1E9 · Telephone: +1-800-469-7890 · FAX: +1-800-824-3005 · www.leviton.com/canada

Leviton S. de R.L. de C.V.
Lago Tana 43, Mexico DF, Mexico CP 11290 · Tel.: (+52)55-5082-1040 · FAX: (+52)5386-1797 · www.leviton.com.mx

ISO 9001 REGISTERED Quality Manufacturer

Visit our Website at: www.leviton.com
© 2018 Leviton Manufacturing Co., Inc. Todos los derechos reservados. Subject to change without notice.

Leviton has a global presence.
If you would like to know where your local Leviton office is located please go to:
www.leviton.com/international/contacts/