8871-3



Color: White

UPC Code: 07847719906

Country Of Origin: China

Item Description

Discontinued Product. Medium Base, One-Piece, Keyless, Incandescent, Unglazed Porcelain Lampholder, Front Mount, Single Circuit, Back Wired, - White

Technical Information

Electrical Specifications

Circuit: Single Circuit

Wattage Rating: 660W

Voltage: 250 VAC

Material Specifications

Color: White

Clip Material: Zinc-Plated Steel

Availability: Distribution

Mechanical Specifications

Access: Back Wired

Wire Strip Length: 3/4 Inch

Product Features

Lamp Socket Base: Medium

Construction: One-Piece

Mounting Type: Removable Strap

Circuit: Single Circuit

Access: Back Wired

Termination: 9-Inch 18-AWM TEW Wire Leads

Screw Shell Material: Aluminum

Body Material: Unglazed Porcelain

Standards and Certifications: UL/CSA

Warranty: 1 Year Limited

Availability: Distribution

Standards and Certifications

UL Listed: File E3810

CSA Certified: File LR-1863

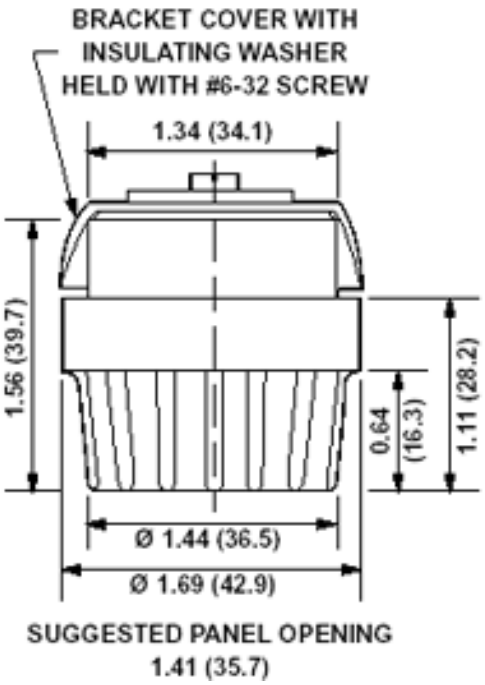

SPECIFICATION SUBMITTAL

JOB NAME:	CATALOG NUMBERS:	
JOB NUMBER:		

Leviton Manufacturing Co., Inc.
201 North Service Road, Melville, NY 11747
Teléfono: +1-800-323-8920 · FAX: +1-800-832-9538 · Tech Line (8:30AM-7:30PM E.S.T. Monday-Friday): +1-800-824-3005

Leviton Manufacturing of Canada, Ltd.
165 Hymus Boulevard, Pointe Claire, Quebec H9R 1E9 · Telephone: +1-800-469-7890 · FAX: +1-800-824-3005 · www.leviton.com/canada

Leviton S. de R.L. de C.V.
Lago Tana 43, Mexico DF, Mexico CP 11290 · Tel.: (+52)55-5082-1040 · FAX: (+52)5386-1797 · www.leviton.com.mx

ISO 9001 REGISTERED Quality Manufacturer

Visit our Website at: www.leviton.com
© 2018 Leviton Manufacturing Co., Inc. Todos los derechos reservados. Subject to change without notice.

Leviton has a global presence.
If you would like to know where your local Leviton office is located please go to:
www.leviton.com/international/contacts/