5891

Straight Blade Wiring Devices



Color: Brown

UPC Code: 07847725133

Country of Origin: Please Contact Customer Service

NEMA: 5-20R



Brand Features

Leviton's line of Heavy-Duty Specification Grade receptacles are designed and manufactured to withstand the most demanding environments. Available in a wide variety of configurations, including isolated ground, tamper-resistant, etc., these Commercial Grade devices are the electrical contractor's choice for use in hotels, schools, hospitals and commercial office buildings.

Item Description

20 Amp, 125 Volt, NEMA 5-20R, 2P, 3W, Narrow Body Single Receptacle, Straight Blade, Commercial Grade, Grounding, , , Back & Side Wired, Steel Strap, - Brown

Technical Information

AC Horsepower Ratings

At Rated Voltage: 1 HP

Electrical Specifications

Grounding: Grounding

Amperage: 20 Amp

Voltage: 125 Volt

NEMA: 5-20R

Pole: 2

Wire: 3

Dielectric Voltage: Withstands 2000V per UL498

Current Limiting: Full Rated Current

Temperature Rise: Max 30C after 100 cycles OL at 150 percent rated current

Environmental Specifications

Flammability: Rated V-2 per UL94

Operating Temperature: -40C to 60C

Material Specifications

Face Material: Nylon

Body Material: Nylon

Line Contacts: Brass Triple-Wipe .031 Thick

Terminal Screws: Brass 10-32

Grounding Screw: Brass 8-32

Strap Material: Zinc-Plated Steel

Clamp Nuts: Zinc-Plated Steel

Color: Brown

Mechanical Specifications

Terminal ID: Brass-Hot, Green-Ground, Silver-Neutral

Terminal Accom.: 14-10 AWG

Product ID: Ratings are permanently marked on device

Termination: Back & Side

Product Features

NEMA: 5-20R

Color: Brown

Standards and Certifications

NEMA: WD-2 WD-6

ANSI: C-73

UL498: File E13399

UL Fed Spec WC-596: File E13399

CSA C22.2 No. 42: File 152105

NOM: 057

Warranty: 10 Year Limited

Dimensional Diagram

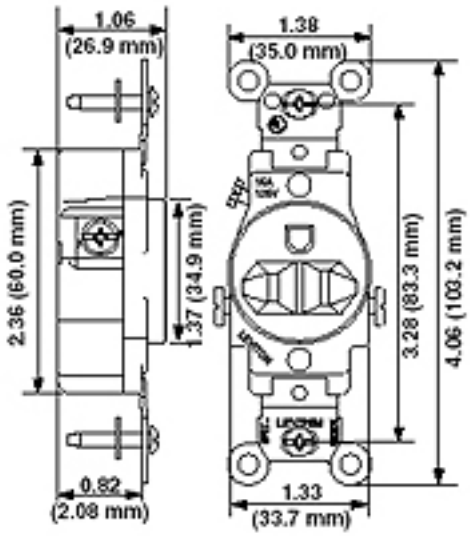

Wiring Diagram

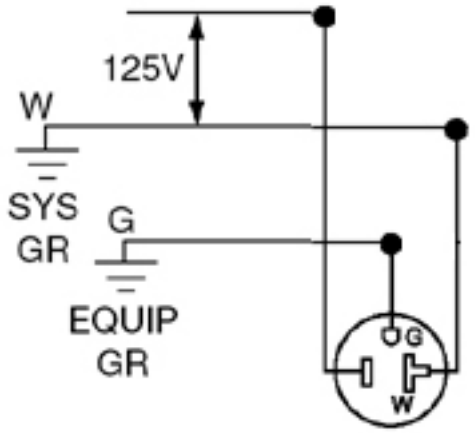

5-20R

SPECIFICATION SUBMITTAL

JOB NAME:	CATALOG NUMBERS:	
JOB NUMBER:		

Leviton Manufacturing Co., Inc.
201 North Service Road, Melville, NY 11747
Telephone: 1-800-323-8920 · FAX: 1-800-832-9538 · Tech Line (8:30AM-7:30PM E.S.T. Monday-Friday): 1-800-824-3005

Leviton Manufacturing of Canada, Ltd.
165 Hymus Boulevard, Pointe Claire, Quebec H9R 1E9 · Telephone: 1-800-469-7890 ·
FAX: 1-800-824-3005 · www.leviton.com/canada

Leviton S. de R.L. de C.V.
Lago Tana 43, Mexico DF, Mexico CP 11290 · Tel.: (+52)55-5082-1040 · FAX: (+52)5386-1797 · www.leviton.com.mx



Visit our Website at: www.leviton.com
© 2012-2015 Leviton Manufacturing Co., Inc. All rights reserved. Subject to change without notice.

Leviton has a global presence.
If you would like to know where your local Leviton office is located please go to: www.leviton.com/international/contacts/