OSSMT-M3I



Color: Ivory

UPC Code: 07847755404

Country Of Origin: Mexico

Brand Features

Leviton's OSSMT Multi-Technology Decora Wall Switch Occupancy Sensor is used to provide automatic lighting control for energy savings and convenience in a variety of commercial applications.

Item Description

Multi-Tech wall box occupancy sensor w/neutral wire, 347V, 60Hz, CEC Title 24 Compliant, 30s-30m Time Delay, Ambient Light Override, Self Adjusting, Field Configurable, Ivory, NAFTA Compliant.

Features and Benefits

- Fast, simple Installation: Fits in a standard wall box and replaces a single-pole wall-switch; neutral and no neutral options available. Sensor can be ganged together with other units in a multiple-switch wall plate.
- Low-profile design eliminates obtrusive “scanning-device” look. Elegant Decora wallplates complement any interior for sleek aesthetics; uses Decora wallplates and coordinates with Leviton’s popular line of Decora wiring devices.
- Convenient Pushbutton provides manual-ON/OFF light switching at any time.
- Segmented Fresnel lens provides optimum sensitivity and performance. Designed with an extensive “minor motion” area where even slight body movements will be detected.
- Vandal resistant PIR lens.
- Adjustable horizontal field-of-view (PIR may be adjusted between 180° and 60° of arc by using integral blinders located on either side of the lens). No masking required.
- Manual-ON/auto-OFF mode for installations where manual-ON switching is required but auto-OFF switching is still desired for CEC Title 24 energy savings.
- To comply with CED Title 24, LED indicator light flashes when sensor detects motion to verify detection is active. Green flashes for ultrasonic, red flashes for PIR.
- Time: The delayed OFF time is preset at 30 minutes in the Auto Adapting mode. A choice of four delayed-OFF time settings are available: 30-seconds (for walking test purposes only), 10, 20, and 30 minutes for fixed time and auto adapting. The LED will flash when the adjusting knob is set to the indicated time value.
- Ambient Light Recognition: Integrated light sensor prevents lights from turning on when the room is adequately illuminated by natural light.
- Self-Adaptive Technology: Callbacks for adjustment are eliminated. Time delay and sensitivity settings are continually adjusted to occupant patterns of use in auto adapt mode.
- Exclusive Walk-through Feature provides increased energy savings by not leaving the lights ON for an extended period after only momentary occupancy.
- Vacancy Confirmation: When the time out expires and the relays turn OFF, a 30 second (OSSMT-G) or 40 second (OSSMT-M) vacancy confirmation exists to turn the relays back on.
- False detection circuitry.
- Small Motion Sensitivity (U/S): Ultrasonic technology provides excellent minor motion sensitivity.
- Ability to disable U/S (OSSMT-M). For added flexbility, OSSMT-G has the ability to disable both PIR and U/S.
- Presentation Mode feature: For slide or film presentations, allows pushbuttons to turn lights OFF and keep them OFF while the room is occupied.
- Exclusive Leviton H.I.S. Circuitry. Specifically designed to handle today’s high inrush electronic ballast loads and offer unmatched durability and service.

- True Zero-Cross Relay switches at the zero crossing point of the AC power curve to ensure maximum contactor life and compatibility with electronic ballasts.

Patents*

MX201328	US8115626
MX303643	US8502660
US5739753	

*This list is provided for patent marking purposes only. A good faith effort is made to maintain the accuracy and completeness of this list. No legal inference should be drawn from the omission of a patent from this list.

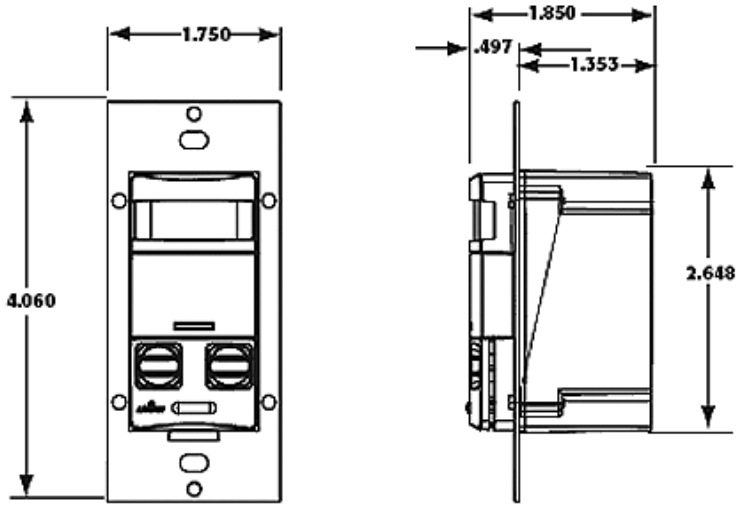

SPECIFICATION SUBMITTAL

JOB NAME:	CATALOG NUMBERS:	
JOB NUMBER:		

Leviton Manufacturing Co., Inc.
201 North Service Road, Melville, NY 11747
Teléfono: +1-800-323-8920 · FAX: +1-800-832-9538 · Tech Line (8:30AM-7:30PM E.S.T. Monday-Friday): +1-800-824-3005

Leviton Manufacturing of Canada, Ltd.
165 Hymus Boulevard, Pointe Claire, Quebec H9R 1E9 · Telephone: +1-800-469-7890 · FAX: +1-800-824-3005 · www.leviton.com/canada

Leviton S. de R.L. de C.V.
Lago Tana 43, Mexico DF, Mexico CP 11290 · Tel.: (+52)55-5082-1040 · FAX: (+52)5386-1797 · www.leviton.com.mx

ISO 9001 REGISTERED Quality Manufacturer

Visit our Website at: www.leviton.com
© 2018 Leviton Manufacturing Co., Inc. Todos los derechos reservados. Subject to change without notice.

Leviton has a global presence.
If you would like to know where your local Leviton office is located please go to:
www.leviton.com/international/contacts/