REWP3-RE



Color: Red Delicious

UPC Code: 07847752910

Country Of Origin: China

Brand Features

Renu in a snap! Renu is the smart new line of decorative electrical products from Leviton. Install Renu and get a fresh stylish look, plus the ability to change the color of any Renu device when you update a room. The line includes switches, outlets, GFCIs, dimmers, and sleek, screwless wallplates available in 20 designer colors. Renu REWP3 3-gang wallplates, slightly larger than standard ones, cover wall imperfections and snap directly onto the devices for a perfect finishing touch. They are designed for Renu devices only, with the following decora exception. A Renu adaptor ring REA00, sold separately in White on White (decora White), Navajo Sand (decora Light Almond) and Onyx Black (decora Black) only, allows any decora device to fit into a Renu wallplate.

Item Description

Leviton Renu® 3-Gang Screwless Snap-On Wallplate/Faceplate REWP3-RE, in Red Delicious

Technical Information

Product Features

Product Family: Renu
Gang: 3
Material: Engineering Grade Polymer
Type: Screwless
Mount: Snap-On
Color: Red Delicious
Standards and Certifications: cULus
Warranty: 5 Year Limited
Device Type: Wallplates

Features and Benefits

- 3-Gang screwless, snap-on wallpate
- Available in 20 popular colors to match any décor
- Snaps directly onto Renu device (sold separately) for fast installation, no screws or subplate needed
- Slightly larger than standard wallplates to cover wall imperfections
- 1-, 2- and 4-gang also available
- Use only with Renu devices, with the following Decora exception--
- Renu adaptor ring REA00* (sold separately) allows any Decora device to fit into a Renu wallplate. *Adaptor ring available in White on White (Decora White), Navajo Sand (Decora Light Almond) and Onyx Black (Decora Black) only

Patents*

CA137294

*This list is provided for patent marking purposes only. A good faith effort is made to maintain the accuracy and completeness of this list. No legal inference should be drawn from the omission of a patent from this list.

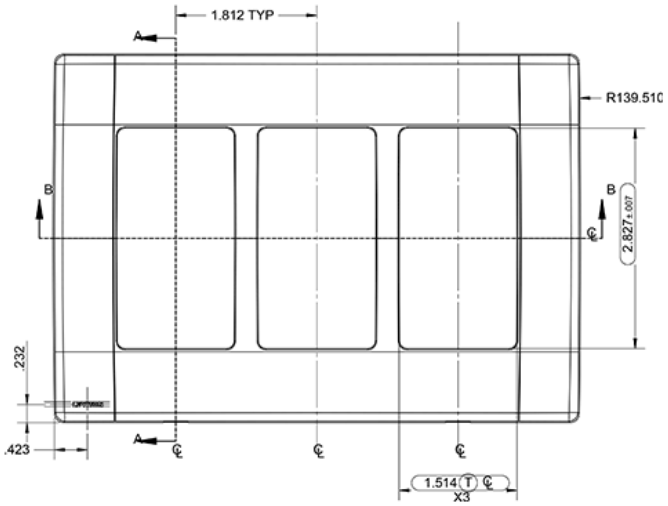

SPECIFICATION SUBMITTAL

JOB NAME:	CATALOG NUMBERS:	
JOB NUMBER:		

Leviton Manufacturing Co., Inc.
201 North Service Road, Melville, NY 11747
Teléfono: +1-800-323-8920 · FAX: +1-800-832-9538 · Tech Line (8:30AM-7:30PM E.S.T. Monday-Friday): +1-800-824-3005

Leviton Manufacturing of Canada, Ltd.
165 Hymus Boulevard, Pointe Claire, Quebec H9R 1E9 · Telephone: +1-800-469-7890 · FAX: +1-800-824-3005 · www.leviton.com/canada

Leviton S. de R.L. de C.V.
Lago Tana 43, Mexico DF, Mexico CP 11290 · Tel.: (+52)55-5082-1040 · FAX: (+52)5386-1797 · www.leviton.com.mx

Visit our Website at: www.leviton.com
© 2018 Leviton Manufacturing Co., Inc. Todos los derechos reservados. Subject to change without notice.

Leviton has a global presence.
If you would like to know where your local Leviton office is located please go to:
www.leviton.com/international/contacts/