78W74-C



Color: Yellow

UPC Code: 07847752514

Country Of Origin: United States

NEMA: L14-30R



Item Description

30A-125/250V, NEMA L14-30, 3P, 4W, Locking Connector for Single Inlet, Industrial Grade, Grounding, Wetguard - YELLOW

Technical Information

Electrical Specifications

Amperage: 30 A

Voltage: 125/250 VAC

Pole: 3

Wire: 4

Grounding: Grounding

Dielectric Voltage: Withstands 2000V per UL498

Current Limiting: Full Rated Current

Temperature Rise: Max 30C after 250 cycles OL at 200 percent rated current

Environmental Specifications

Flammability: Rated V-2 per UL 94 (wiring module)

Operating Temperature: -40°C to 60°C

Enclosure Rating: NEMA 4, 4X, 12 IEC IP66

Environment: Wet

Material Specifications

Husk: Santoprene TPV

Body Material: Nylon

Wiring Module: Nylon

Compression Nut: Nylon

Strain Relief Clamp: Nylon

Bushing: Santoprene TPV

Blades/Contacts, Terminal Clamps: Electroless Nickel-coated Brass

Terminal Screws: Electroless Nickel-coated Brass

Assembly Screws: Stainless Steel, Non-Magnetic

Mechanical Specifications

Terminal Accom.: #12 AWG to #8 AWG

Product ID: Ratings and NEMA I.D. permanently marked on device

Cord Grip Range (in): .625-1.125

Product Features

NEMA: L14-30R

Color: Yellow

Device Type: Locking Connector

Brand: Wetguard

Standards and Certifications

NEMA: WD-6

ANSI: C-73

UL: 498

CSA: C22.2 No. 42

NOM: 057

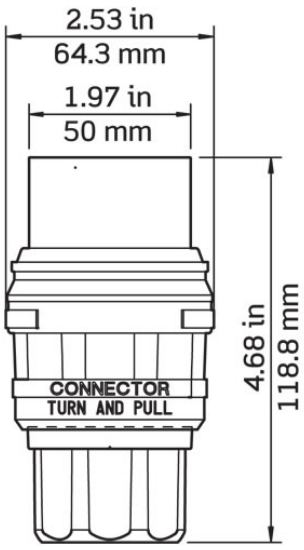

SPECIFICATION SUBMITTAL

JOB NAME:	CATALOG NUMBERS:	
JOB NUMBER:		

Leviton Manufacturing Co., Inc.
201 North Service Road, Melville, NY 11747
Teléfono: +1-800-323-8920 · FAX: +1-800-832-9538 · Tech Line (8:30AM-7:30PM E.S.T. Monday-Friday): +1-800-824-3005

Leviton Manufacturing of Canada, Ltd.
165 Hymus Boulevard, Pointe Claire, Quebec H9R 1E9 · Telephone: +1-800-469-7890 · FAX: +1-800-824-3005 · www.leviton.com/canada

Leviton S. de R.L. de C.V.
Lago Tana 43, Mexico DF, Mexico CP 11290 · Tel.: (+52)55-5082-1040 · FAX: (+52)5386-1797 · www.leviton.com.mx

ISO 9001 REGISTERED Quality Manufacturer

Visit our Website at: www.leviton.com
© 2018 Leviton Manufacturing Co., Inc. Todos los derechos reservados. Subject to change without notice.

Leviton has a global presence.
If you would like to know where your local Leviton office is located please go to:
www.leviton.com/international/contacts/