14W04



Color: Yellow

UPC Code: 07847747408

Country Of Origin: United States

NEMA: 1-15P



Brand Features

Leviton's Wetguard line of industrial watertight wiring devices are the most versatile, well-engineered watertight devices on the market. They meet IP67 and NEMA ratings for water ingress protection, and offer many significant advantages over competitive brands.

Item Description

15 Amp, 125 Volt, NEMA 1-15, 2P, 2W, Plug, Straight Blade, Industrial Grade, Non-Grounding, Wetguard - YELLOW

Technical Information

Electrical Specifications

Amperage: 15 A

Voltage: 125 VAC

Pole: 2

Wire: 2

Dielectric Voltage: Withstands 2000V per UL498

Current Limiting: Full Rated Current

Temperature Rise: Max 30C after 250 cycles OL at 200 percent rated current

Environmental Specifications

Flammability: Rated V-2 per UL 94

Operating Temperature: -40°C to 60°C

Environment: Wet

Material Specifications

Body Interior: Nylon

Body Material: Santoprene TPV

Compression Nut, Strain Relief: Nylon

Blades/Contacts: Electroless Nickel-coated Brass

Clamps: Electroless Nickel-coated Brass

Terminal Screws: Electroless Nickel-coated Brass

Assembly Screws: Stainless Steel, Non-Magnetic

Wire Module: Nylon

Bushing: Santoprene TPV

Mechanical Specifications

Terminal ID: Brass-Hot, Green-Ground, Silver-Neutral

Terminal Accom.: 18-10 AWG

Product ID: Ratings and NEMA I.D. permanently marked on device

Cord Grip Range (in): .234-.687

Product Features

NEMA: 1-15P

Color: Yellow

Brand: Wetguard

Device Type: Straight Blade Plug

Standards and Certifications

NEMA: WD-6

ANSI: C-73

UL: 498

NOM: 057

CSA C22.2 No. 42: File LR-406

Warranty: Lifetime Warranty

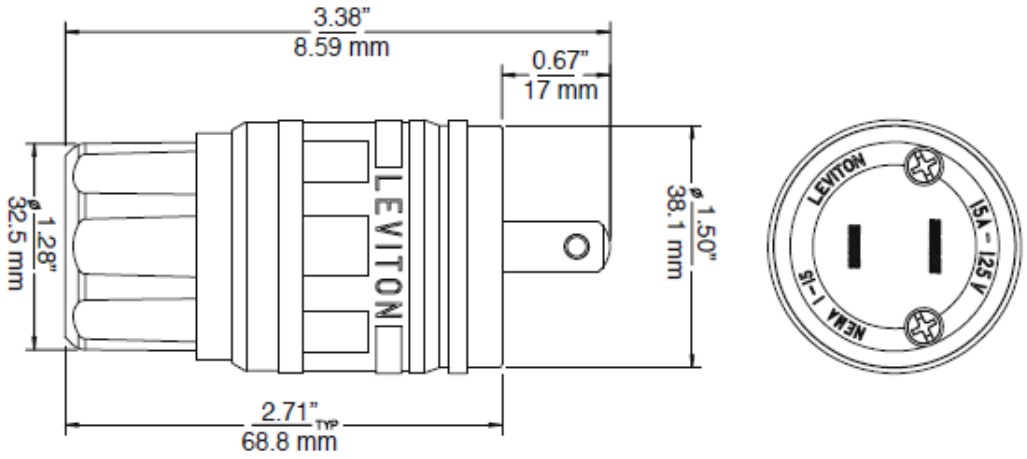



1-15P

SPECIFICATION SUBMITTAL

JOB NAME:	CATALOG NUMBERS:	
JOB NUMBER:		

Leviton Manufacturing Co., Inc.
201 North Service Road, Melville, NY 11747
Teléfono: +1-800-323-8920 · FAX: +1-800-832-9538 · Tech Line (8:30AM-7:30PM E.S.T. Monday-Friday): +1-800-824-3005

Leviton Manufacturing of Canada, Ltd.
165 Hymus Boulevard, Pointe Claire, Quebec H9R 1E9 · Telephone: +1-800-469-7890 · FAX: +1-800-824-3005 · www.leviton.com/canada

Leviton S. de R.L. de C.V.
Lago Tana 43, Mexico DF, Mexico CP 11290 · Tel.: (+52)55-5082-1040 · FAX: (+52)5386-1797 · www.leviton.com.mx

ISO 9001 REGISTERED Quality Manufacturer

Visit our Website at: www.leviton.com
© 2018 Leviton Manufacturing Co., Inc. Todos los derechos reservados. Subject to change without notice.

Leviton has a global presence.
If you would like to know where your local Leviton office is located please go to:
www.leviton.com/international/contacts/