

Color: Black-White

UPC Code: 07847781685

Country Of Origin: United States

3333-GC

Brand Features

Leviton's Industrial Grade Locking Devices are built to provide unparalleled quality and superior performance in the most severe industrial settings. Leviton combines the best materials available with superior production standards to produce a broad selection of Locking Devices of unmatched flexibility and dependability.

Item Description

30 Amp, 250 Volt, Non-NEMA, 2P, 3W, Locking Connector, Industrial Grade, Grounding - BLACK-WHITE

Technical Information

Electrical Specifications

Grounding: Grounding

Amperage: 30 A

Voltage: 250 VAC

Pole: 2

Wire: 3

Dielectric Voltage: Withstands 2000V per UL498

Current Interrupting: Certified for current interrupting at full rated current

Temperature Rise: Max 30C at 250 cycles OL at 200 pct rated current

Environmental Specifications

Flammability: Rated HB or better UL94

Operating Temperature: -40°C to 60°C

Environment: Dry

Material Specifications

Body Material: Impact Modified Nylon

Back Cover: Thermoplastic

Wire Module: Nylon

Cord-Clamp: Nylon

Clamp Insert: Nylon

Blades/Contacts: Solid Brass

Terminal Screws: Brass

Assembly Screws: Steel, Zinc Plated

Color: Black-White

Mechanical Specifications

Terminal ID: Brass-Hot, Green-Ground, Silver-Neutral

Terminal Accom.: 18-10 AWG

Product ID: Ratings and NEMA I.D. permanently marked on device

Cord Range: .385 - .860

Wire Gauge: 16-8 AWG

Product Features

Color: Black-White

Brand: Black and White

Standards and Certifications

NEMA: WD-6

ANSI: C-73

UL498: File E13393

CSA C22.2 No. 42: File LR-406

NOM: 057

Warranty: Lifetime Warranty

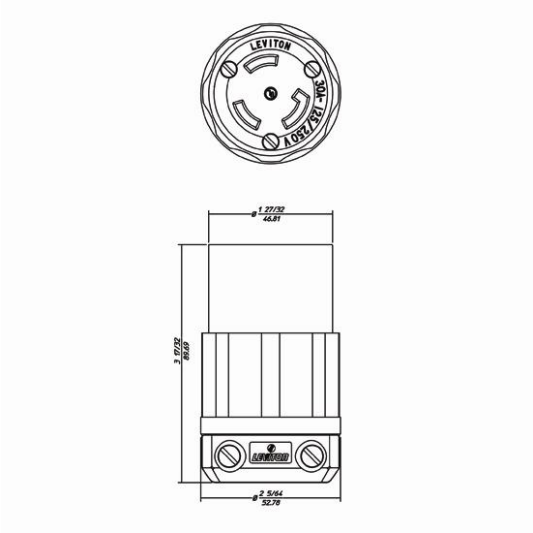

SPECIFICATION SUBMITTAL

JOB NAME:	CATALOG NUMBERS:	
JOB NUMBER:		

Leviton Manufacturing Co., Inc.
201 North Service Road, Melville, NY 11747
Teléfono: +1-800-323-8920 · FAX: +1-800-832-9538 · Tech Line (8:30AM-7:30PM E.S.T. Monday-Friday): +1-800-824-3005

Leviton Manufacturing of Canada, Ltd.
165 Hymus Boulevard, Pointe Claire, Quebec H9R 1E9 · Telephone: +1-800-469-7890 · FAX: +1-800-824-3005 · www.leviton.com/canada

Leviton S. de R.L. de C.V.
Lago Tana 43, Mexico DF, Mexico CP 11290 · Tel.: (+52)55-5082-1040 · FAX: (+52)5386-1797 · www.leviton.com.mx

ISO 9001 REGISTERED Quality Manufacturer

Visit our Website at: www.leviton.com
© 2018 Leviton Manufacturing Co., Inc. Todos los derechos reservados. Subject to change without notice.

Leviton has a global presence.
If you would like to know where your local Leviton office is located please go to:
www.leviton.com/international/contacts/