5618-2W



Color: White

UPC Code: 07847751833

Country of Origin: United States - **Eligible for ARRA funded projects*

made in USA*

May include one or more globally sourced components.

RECOVERY.GOV

Brand Features

Featuring a look and feel that qualify them as modern classics, Decora Designer Rocker Switches add so much at a modest cost that no home should be without them. Their sleek simplicity and smooth, quiet operation stem from quality materials fitted to tight tolerances and finished with great care, ensuring years of trouble-free service. Easy to wire, they work with tungsten, fluorescent and resistive loads. Legendary Decora® Designer Rocker Switches come in a variety of colors to harmonize with any décor. Their sturdy construction and dependable performance are everything you'd expect from the pre-eminent switch maker.

Item Description

15 Amp, 120/277 Volt, Decora Rocker Pilot Light - Illuminated ON - Req. Neutral Single -Pole AC Quiet Switch, Residential Grade, Grounding, Quickwire Push-In & Side Wired - White

Technical Information

Product Features

Grounding: Grounding

Feature: Pilot Light - Illuminated ON - Req. Neutral

Amperage: 15 Amp

Voltage: 120/277 VAC

Voltage: 120/277 Volt

HP Rating: 1/2HP-120V 2HP-240V-277V

Max. Amperage: 12 Amp

Termination: Quickwire Push-In & Side

Actuator Material: Thermoplastic

Body Material: Thermoplastic

Strap Material: Steel

Color: White

Standards and Certifications: UL/CSA

Warranty: 2 Year Limited

Features and Benefits

- Pilot Light switch rocker visible when ON even in bright light
- Switch border shields against dust and fits in wallplate to prevent rocker binding
- Side-wiring terminals accept both solid and stranded wire to ease installation
- Full rated current capacity with tungsten, fluorescent or resistive loads. Motor capacity is 80% of switch rating
- Conform to all NEMA standard specifications
- Backed by a Limited Two-Year Warranty

Dimensional Diagram

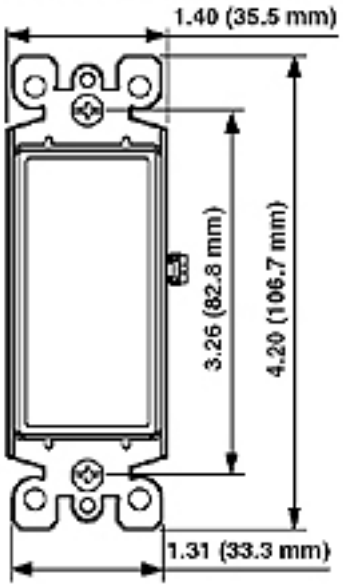

Wiring Diagram

Single-Pole Pilot

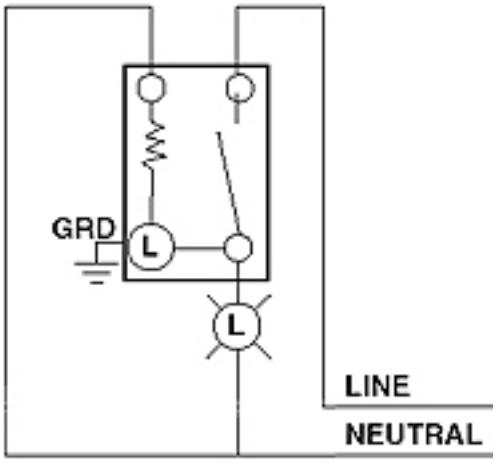

SPECIFICATION SUBMITTAL

JOB NAME:	CATALOG NUMBERS:	
JOB NUMBER:		

Leviton Manufacturing Co., Inc.
201 North Service Road, Melville, NY 11747
Telephone: 1-800-323-8920 · FAX: 1-800-832-9538 · Tech Line (8:30AM-7:30PM E.S.T. Monday-Friday): 1-800-824-3005

Leviton Manufacturing of Canada, Ltd.
165 Hymus Boulevard, Pointe Claire, Quebec H9R 1E9 · Telephone: 1-800-469-7890 ·
FAX: 1-800-824-3005 · www.leviton.com/canada

Leviton S. de R.L. de C.V.
Lago Tana 43, Mexico DF, Mexico CP 11290 · Tel.: (+52)55-5082-1040 · FAX: (+52)5386-1797 · www.leviton.com.mx

Visit our Website at: www.leviton.com
© 2012-2016 Leviton Manufacturing Co., Inc. All rights reserved. Subject to change without notice.

Leviton has a global presence.
If you would like to know where your local Leviton office is located please go to: www.leviton.com/international/contacts/

**Buy American Compliant Logo -- The American Recovery And Reinvestment Act of 2009 ("ARRA") provides federal grants and loans for projects throughout the country. Section 1605 of the Act, named the "Buy American" provision, requires that certain materials and manufactured products used in projects funded by the Act be manufactured in the United States. The appearance of the Recovery Act Logo in relation to a Leviton product is only intended to reflect that such product may be used in an ARRA funded project. It does not mean that such product or Leviton is sponsored or endorsed by, or that Leviton receives funds from, the federal government or the Recovery Accountability and Transparency Board. Nothing in Leviton's use of the logo is intended to suggest anything regarding the requirements for funding under ARRA.*