3-Outlet Power Strip

APPLICATION

The 3-Outlet Power Strip provides reliable AC power in all Leviton Structured Media™ Centers. The power strip includes three NEMA 5-15R receptacles.



FEATURES

- Three AC tamper resistant outlets
- 1.5-foot cord attached
- 125 V, 15 amp

STANDARDS COMPLIANCE

- UL 1363
- RoHS

PHYSICAL SPECIFICATIONS

Dimensions: See drawings below
Materials: White ABS plastic

COUNTRY OF ORIGIN

USA

WARRANTY INFORMATION

For a copy of Leviton product warranties, visit www.leviton.com/warranty.

SPECIFICATION

Power strip shall be UL Listed. Power strip shall include three NEMA 5-15R receptacles, with tamper resistant feature. The power strip shall include an attached 1.5-foot cord to extend power reach inside any Structured Media Center enclosure.

ELECTRONIC FILES

For CAD files, typical specs, or technical drawings (.DXF, .DWG), visit www.leviton.com.

DRAFT

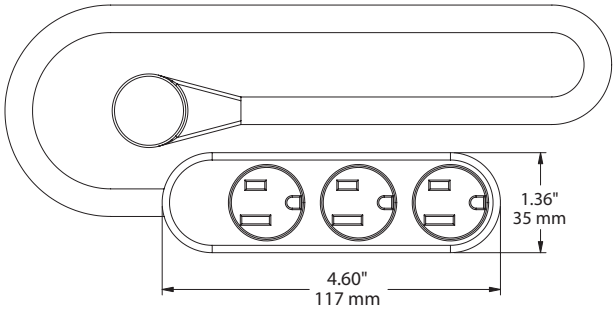

PART NUMBERS

Description	Part No.
3-Outlet Power Strip for Structured Media™ Centers	49605-APS

H19 7602

Leviton Network Solutions
2222 - 222nd St. SE
Bothell, WA 98021-4416

tel 1-800-824-3005
tel +1-425-486-2222
appeng@leviton.com
www.leviton.com

Asia / Pacific
T +1.631.812.6228
E infoasean@leviton.com

Canada
T +1.514.954.1840
E pcservice@leviton.com

Caribbean
T +1.954.593.1896
E infocaribbean@leviton.com

China
T +852.2774.9876
E infochina@leviton.com

Colombia
T +57.1.743.6045
E infocolombia@leviton.com

Europe
T +44.0.1592.772124
E customerserviceeu@leviton.com

Mexico
T +52.55.5082.1040
E lsamarketing@leviton.com

Middle East & Africa
T +971.4.247.9800
E lmeinfo@leviton.com

South Korea
T +82.2.3273.9963
E infokorea@leviton.com

Copyright © 2019 Leviton Manufacturing Co., Inc. All rights reserved. Subject to change without notice.

Released August 2019