454CR-4



FD Box, Single-Gang, Corrosion-Resistant, 1 " threaded conduit openings - YELLOW

Leviton's Wetguard line of industrial watertight wiring devices are the most versatile, well-engineered watertight devices on the market. They meet IP and NEMA ratings for water ingress protection, and offer many significant advantages over competitive brands.

Technical Information

Product Features

Color : Yellow

Material Specifications

Material : Glass-Filled Polyester

Environmental Specifications

Enclosure Rating : IEC IP66

UPC Code : 07847793672

Country Of Origin : United States

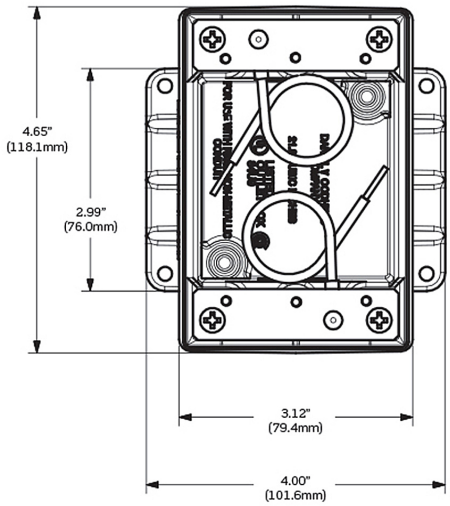

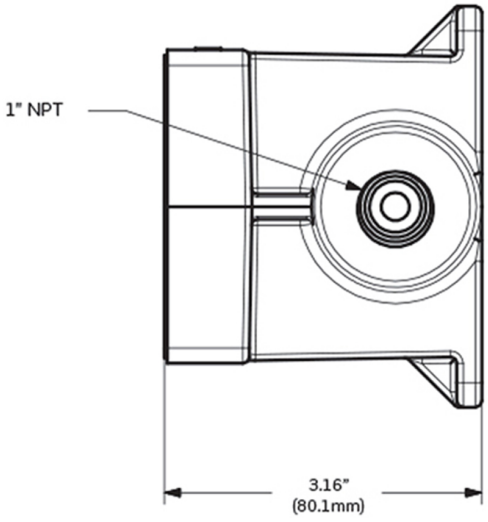

SPECIFICATION SUBMITTAL

JOB NAME:	CATALOG NUMBERS:	
JOB NUMBER:		

Leviton Manufacturing Co., Inc.
201 North Service Road, Melville, NY 11747
Telephone: +1-800-323-8920 · FAX: +1-800-832-9538 · Tech Line (8:30AM-7:30PM E.S.T. Monday-Friday): +1-800-824-3005

Leviton Manufacturing of Canada, Ltd.
165 Hymus Boulevard, Pointe Claire, Quebec H9R 1E9 · Telephone: +1-800-469-7890 · FAX: +1-800-824-3005 · www.leviton.com/canada

Leviton S. de R.L. de C.V.
Lago Tana 43, Mexico DF, Mexico CP 11290 · Tel.: (+52)55-5082-1040 · FAX: (+52)5386-1797 · www.leviton.com.mx

ISO 9001 REGISTERED Quality Manufacturer

Visit our Website at: www.leviton.com
© 2018 Leviton Manufacturing Co., Inc. All Rights Reserved. Subject to change without notice.

Leviton has a global presence.
If you would like to know where your local Leviton office is located please go to:
www.leviton.com/international/contacts/