CATALOG NUMBER	I–LINE TYPE	MAIN TYPE	AMPACITY	BUS MATERIAL	LUG SIZE	AVAILABLE MOUNTING	
						INCHES	MM
HMA315SL8	HMA	MAIN LUGS	800	CU	(4) 3/0–750 KCMIL	31.50	800
HMA315SL10	HMA	MAIN LUGS	1000	CU	(4) 3/0–750 KCMIL	31.50	800

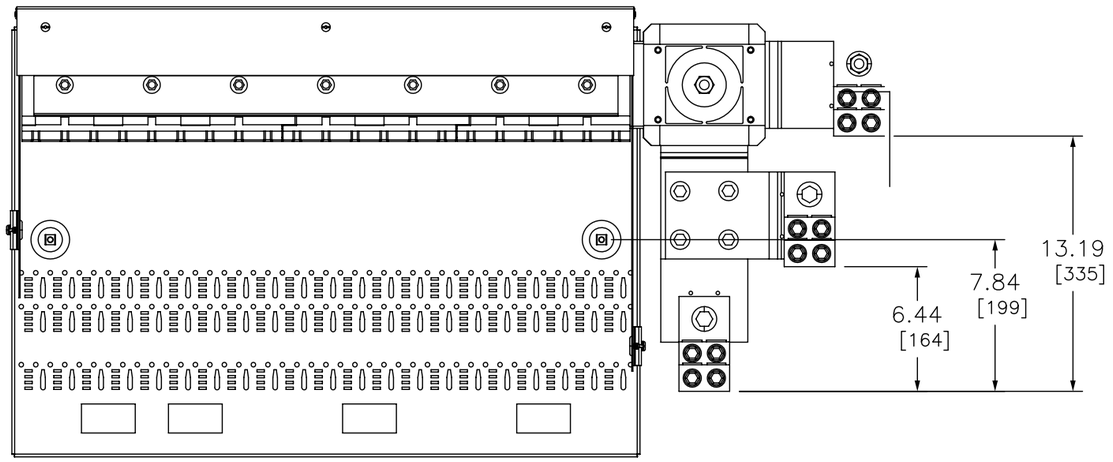

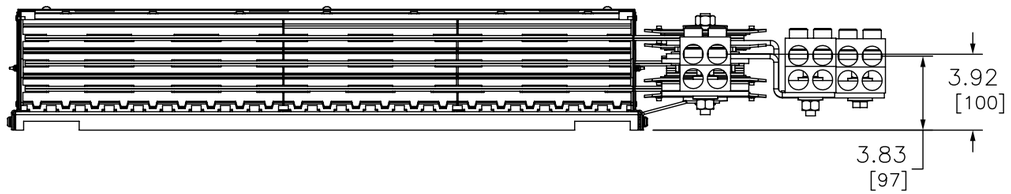

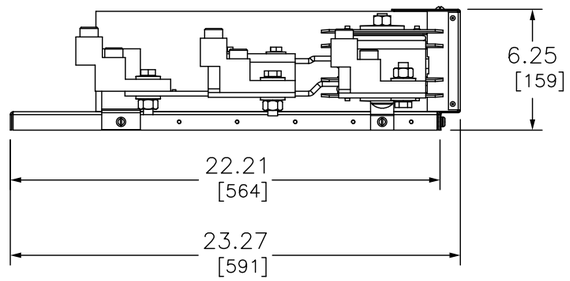

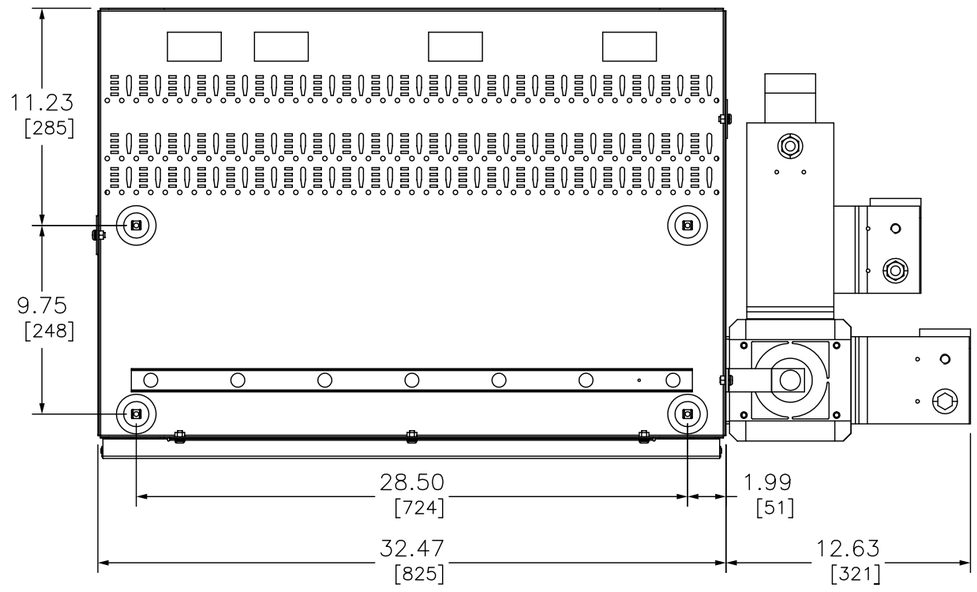

DUAL DIMENSIONS: INCHES
MILLIMETERS

PNLBD INT I–LINE OEM

SQUARE D™
by Schneider Electric

DWG# NO. HMA315SLX

OCTOBER 2017