Product data sheet
Characteristics

TSXDEY32D2K
discrete input module Modicon Premium - 32 I 24 V DC

Product availability : Stock - Normally stocked in distribution facility

Price* : 1106.30 USD



Main

Range of product	Modicon Premium Automation platform
Product or component type	Discrete input module
Discrete input number	32 current sink isolated conforming to EN/IEC 61131-2 type 1
Discrete input voltage	24 V DC positive
Sensor power supply	19...30 V
Discrete input current	3.5 mA

Complementary

Voltage state 1 guaranteed	>= 11 V
Current state 1 guaranteed	>= 3 mA
Voltage state 0 guaranteed	<= 5 V
Current state 0 guaranteed	<= 1.5 mA
Input impedance	6300 Ohm at state 1
Response time	4 ms <= 7 ms
Insulation resistance	< 10 MOhm 500 V DC
Power dissipation	(1 W + 0.1 W x No of channels used)
Electrical connection	HE-10 connector
Marking	CE
Current consumption	135 mA 5 V DC 160 mA 24 V DC
Module format	Standard
Product weight	0.66 lb(US) (0.3 kg)

Environment

Dielectric strength	1500 V AC at 50/60 Hz

Disclaimer: This documentation is not intended as a substitute for and is not to be used for determining suitability or reliability of these products for specific user applications

Standards	CSA C22.2 No 213 Class I Division 2 Group B 93/68/EEC CSA C22.2 No 142 CSA C22.2 No 213 Class I Division 2 Group C 92/31/EEC UL 508 CSA C22.2 No 213 Class I Division 2 Group A EN/IEC 61131-2 89/336/EEC IEC 60664 73/23/EEC CSA C22.2 No 213 Class I Division 2 Group D
Product certifications	DNV LR GL ABS RMRS RINA BV
Ambient air temperature for operation	32...140 °F (0...60 °C)
Ambient air temperature for storage	-13...158 °F (-25...70 °C)
Relative humidity	10...95 % without condensation for operation 5...95 % without condensation for storage
Operating altitude	0...6561.68 ft (0...2000 m)
Protective treatment	TC
IP degree of protection	IP20
Pollution degree	2

Ordering and shipping details

Category	22558 - TSX PREMIUM, ATRIUM & PL7 PRO
Discount Schedule	PC22
GTIN	00785901871040
Nbr. of units in pkg.	1
Package weight(Lbs)	0.90000000000000002
Returnability	Y
Country of origin	FR

Offer Sustainability

Sustainable offer status	Not Green Premium product
RoHS (date code: YYWW)	Compliant - since 0847 - Schneider Electric declaration of conformity Schneider Electric declaration of conformity
REACh	Reference not containing SVHC above the threshold Reference not containing SVHC above the threshold
Product end of life instructions	Need no specific recycling operations

Contractual warranty

Warranty period	18 months

TSXDEY32D2K

Standard and Extendable Racks for Modules Mounting

Dimensions of Modules and Racks

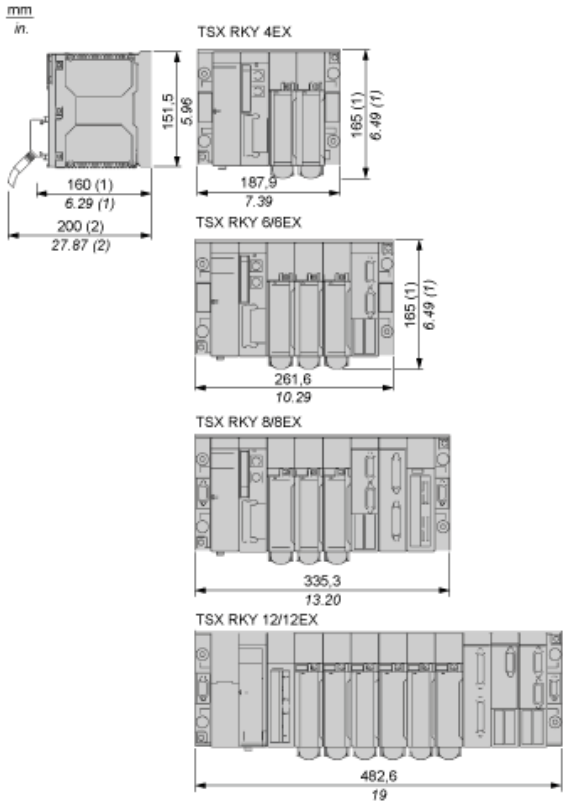

(1) With screw terminal block modules.

(2) Maximum depth for all types of modules and their associated connectors.

TSXDEY32D2K

24 Vdc Discrete Input 32-Channel Module

Wiring Diagram

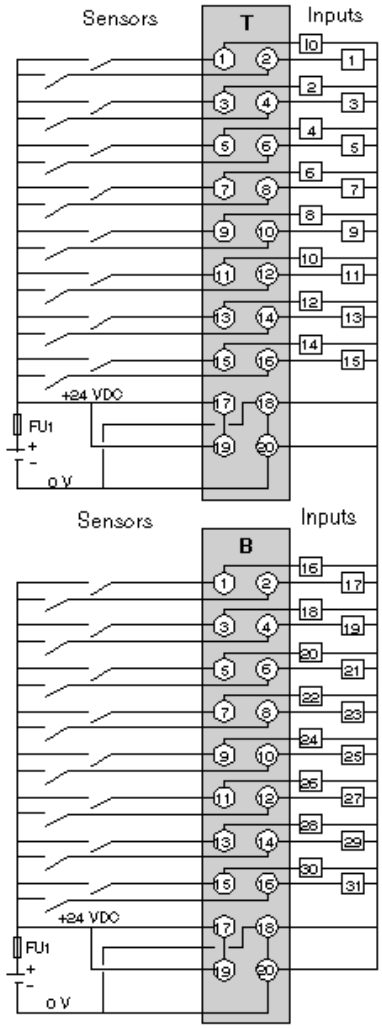

FU1 0.5 A quick-blow fuse