Product data sheet

Specifications



Safety controller, Modicon MCM, 8 inputs 4 outputs, combined with backplane expansion connector, screw

XPSMCMC10804B

Product availability: Non-Stock - Not normally stocked in distribution facility

Main

Range of Product	Modicon Safety automation
Device short name	XPSMCM
Electrical Connection	Screw terminal
Product or Component Type	Modular safety controller CPU kit
[Us] rated supply voltage	24 V - 20...20 % DC
Number of inputs	8 digital input connection 4 digital interlock start/restart or external device monitoring
Number of outputs	4 safety outputs OSSD contactor/drive connection 4 test line control outputs 4 configurable diagnostic connection
Discrete input voltage	24 V
Discrete output current	400 mA
Discrete input current	400 mA
Discrete input type	Safety input PNP
Discrete output type	PNP
Kit composition	1 safety controller CPU 1 backplane expansion connector
Function of module	Emergency stop ISO 13850 Guard monitoring EN/ISO 14119 Enabling switch monitoring IEC 60947-5-1 Light curtain monitoring IEC 61496-1 Foot switch monitoring IEC 60947-5-1 Light curtain monitoring EN/ISO 14119 Switch monitoring EN 574 Two-hand control EN/ISO 14119 Safety mat monitoring IEC 61326-1 Switch monitoring IEC 61800-5-2 Muting function of light curtains IEC 61800-5-2 Safety time delays Counter functions
Backplane connector	With

Complementary

Synchronisation time between inputs	< 0.5 ms
Power dissipation in W	3 W
Maximum number of I/O expansion module	14 128 input 14 32.0 output
Integrated connection type	Backplane expansion bus USB 2.0 port

Price is “List Price” and may be subject to a trade discount – check with your local distributor or retailer for actual price.

Disclaimer: This documentation is not intended as a substitute for and is not to be used for determining suitability or reliability of these products for specific user applications

Data storage equipment	SD card optional)
Inductive load	2.4 mH
Load capacitance	0.82 µF
Safety level	Can reach category 4 ISO 13849-1 Can reach PL = e ISO 13849-1 Type 4 IEC 61496-1 SILCL 3 IEC 62061
Quality labels	CE
Local signalling	1 LED green PWR power ON 1 LED green RUN RUN (status) 1 LED red E IN internal error 1 LED red E EX external error 1 LED orange COM communication 1 LED blue EN master enable 8 LEDs yellow IN input status 2 LEDs green/red OUT output status 2 LEDs yellow RST restart signal 2 LEDs yellow STATUS output channel
Connections - terminals	2 captive screw terminals, removable terminal block 1 captive screw terminals, removable terminal block
Cable cross section	0.0003…0.002 in² (0.2…1.5 mm²) - AWG 24...AWG 16 flexible without cable end 0.0003…0.004 in² (0.2…2.5 mm²) - AWG 24...AWG 14 flexible without cable end 0.0004…0.002 in² (0.25…1 mm²) - AWG 23...AWG 18 flexible with cable end, without bezel 0.0004…0.004 in² (0.25…2.5 mm²) - AWG 23...AWG 14 flexible with cable end, with bezel 0.0004…0.002 in² (0.25…1.5 mm²) - AWG 23...AWG 16 flexible with cable end, without bezel 0.0008…0.002 in² (0.5…1.5 mm²) - AWG 20...AWG 16 flexible with cable end, with double bezel 0.0003…0.002 in² (0.2…1 mm²) - AWG 24...AWG 18 solid without cable end 0.0003…0.004 in² (0.2…2.5 mm²) - AWG 24...AWG 14 solid without cable end
Mounting support	Omega 35 mm DIN rail EN 50022
Depth	4.5 in (114.5 mm)
Height	3.9 in (99 mm)
Width	0.9 in (22.5 mm)
Product Weight	0.342 lb(US) (0.155 kg)

Environment

Standards	IEC 61496-1 ISO 13849-1 IEC 61508 IEC 61800-5-1 IEC 62061
Product Certifications	TÜV RCM cULus
IP degree of protection	IP20
Ambient Air Temperature for Operation	14…131 °F (-10…55 °C)
Ambient Air Temperature for Storage	-4…185 °F (-20…85 °C)
Relative humidity	10…95 %
Pollution degree	2
[Uimp] rated impulse withstand voltage	4 kV IEC 61800-5-1
Safety reliability data	PFHd = 1.35E-8 1/h high DC > 99 % MTTFd < 100 years

Insulation	250 V AC between power supply and housing IEC 61800-5-1
Overvoltage category	II
Electromagnetic compatibility	Electrostatic discharge immunity test - test level: 6 kV (on contact) conforming to IEC 61000-4-2 Electrostatic discharge immunity test - test level: 20 kV (on air) conforming to IEC 61000-4-2 Susceptibility to electromagnetic fields - test level: 10 V/m (80...1000 MHz) conforming to IEC 61000-4-3 Susceptibility to electromagnetic fields - test level: 30 V/m (1.4 GHz...2 GHz) conforming to IEC 61000-4-3
Vibration resistance	+/-0.35 mm (f= 10…55 Hz) conforming to IEC 61496-1
Shock resistance	10 gn 16 ms) 1000 shocks on each axis IEC 61496-1
Service Life	20 year(s)

Ordering and shipping details

Category	US1SAF222477
Discount Schedule	SAF2
GTIN	3606481987075
Returnability	No
Country of origin	IT

Packing Units

Unit Type of Package 1	PCE
Nbr. of units in pkg.	1
Package 1 Height	1.772 in (4.500 cm)
Package 1 Width	4.921 in (12.500 cm)
Package 1 Length	6.299 in (16.000 cm)
Package weight(Lbs)	9.312 oz (264.000 g)
Unit Type of Package 2	S01
Number of Units in Package 2	6
Package 2 Height	5.906 in (15.000 cm)
Package 2 Width	5.906 in (15.000 cm)
Package 2 Length	15.748 in (40.000 cm)
Package 2 Weight	4.059 lb(US) (1.841 kg)

Contractual warranty

Warranty (in months)	18

Environmental Data

Schneider Electric aims to achieve Net Zero status by 2050 through supply chain partnerships, lower impact materials, and circularity via our ongoing “Use Better, Use Longer, Use Again” campaign to extend product lifetimes and recyclability.

Environmental Data explained >

How we assess product sustainability >

Use Better

Materials and Substances

Packaging made with recycled cardboard	No
Packaging without single use plastic	Yes
EU RoHS Directive	Compliant By Exemption
REACh Regulation	Free of Substances of Very High Concern above the threshold
California proposition 65	WARNING: This product can expose you to chemicals including: Lead and lead compounds, which is known to the State of California to cause cancer and birth defects or other reproductive harm. For more information go to www.P65Warnings.ca.gov

Use Longer

Lifetime extension

Repair	No

Use Again

Repack and remanufacture

Take-back	No
WEEE Label	The product must be disposed on European Union markets following specific waste collection and never end up in rubbish bins.

Dimensions Drawings

Dimensions

Screw Terminal

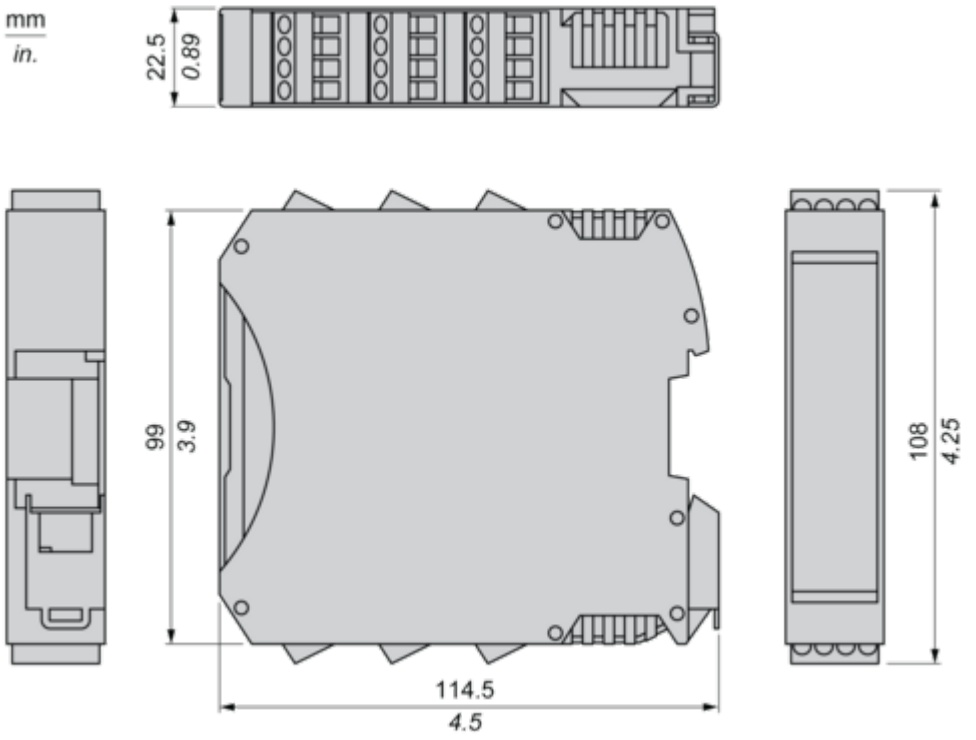

Mounting and Clearance

Mounting Safety Controller CPU with Module(s)

Mount BackPlane Connector on Rail

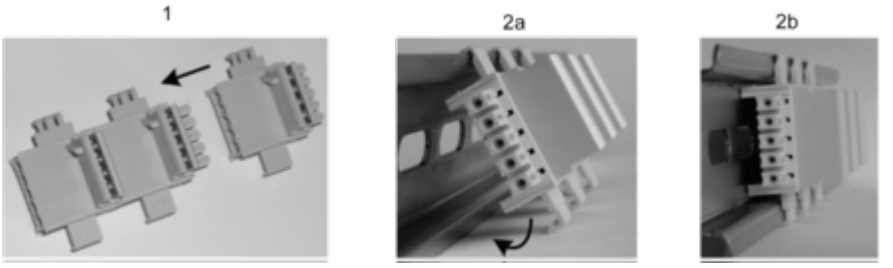

1 : Connect as much Backplane Connector as module to be install.
2 : Fix the connectors to the rail (Top first).

Mount Safety Controller CPU with Other Module(s)

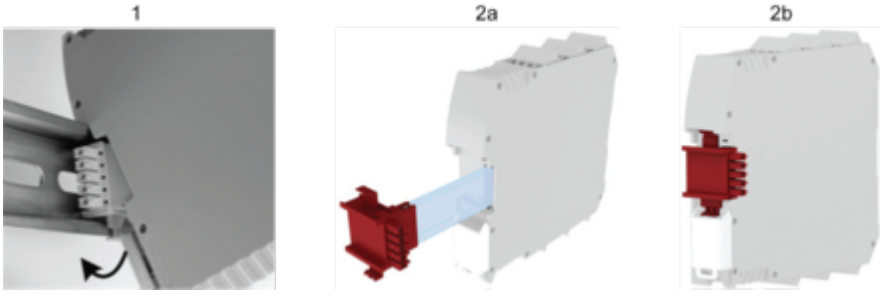

1 : Mount controller CPU and modules on rail.
2 : Make sure that the controller CPU or the module(s) are plugged on the BackPlane connector.

Connections and Schema

Wiring

Terminal Designation

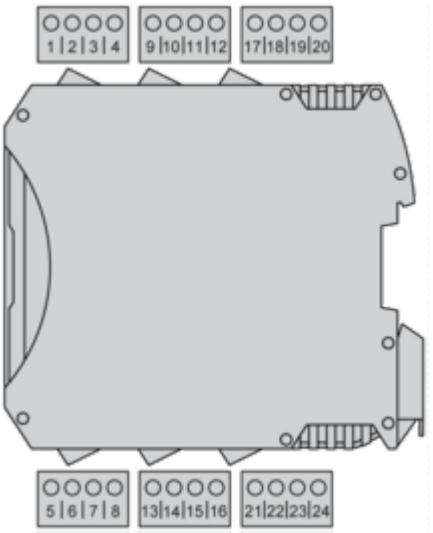

Terminal	Signal	Description
1	24 VDC	24 Vdc power supply
2	NC	–
3	NC	–
4	0 VDC	0 Vdc power supply
5	OSSD1	Safety-related output 1
6	OSSD2	Safety-related output 2
7	RESTART_FBK1/ STATUS1	Feedback/Restart 1 for OSSD1
		Configurable output 1 for OSSD1
8	RESTART_FBK2/ STATUS2	Feedback/Restart 2 for OSSD2
		Configurable output 2 for OSSD2
9	OSSD3	Safety-related output 3
10	OSSD4	Safety-related output 4
11	RESTART_FBK3/ STATUS3	Feedback/Restart 3 for OSSD3
		Configurable output 3 for OSSD3
12	RESTART_FBK4/ STATUS4	Feedback/Restart 4 for OSSD2
		Configurable output 4 for OSSD2

Terminal	Signal	Description
13	OUT_TEST1	Test output for detection of short circuits/cross circuits in input circuits
14	OUT_TEST2	
15	OUT_TEST3	
16	OUT_TEST4	
17	INPUT1	Safety-related input 1
18	INPUT2	Safety-related input 2
19	INPUT3	Safety-related input 3
20	INPUT4	Safety-related input 4
21	INPUT5	Safety-related input 5
22	INPUT6	Safety-related input 6
23	INPUT7	Safety-related input 7
24	INPUT8	Safety-related input 8

Wiring Example

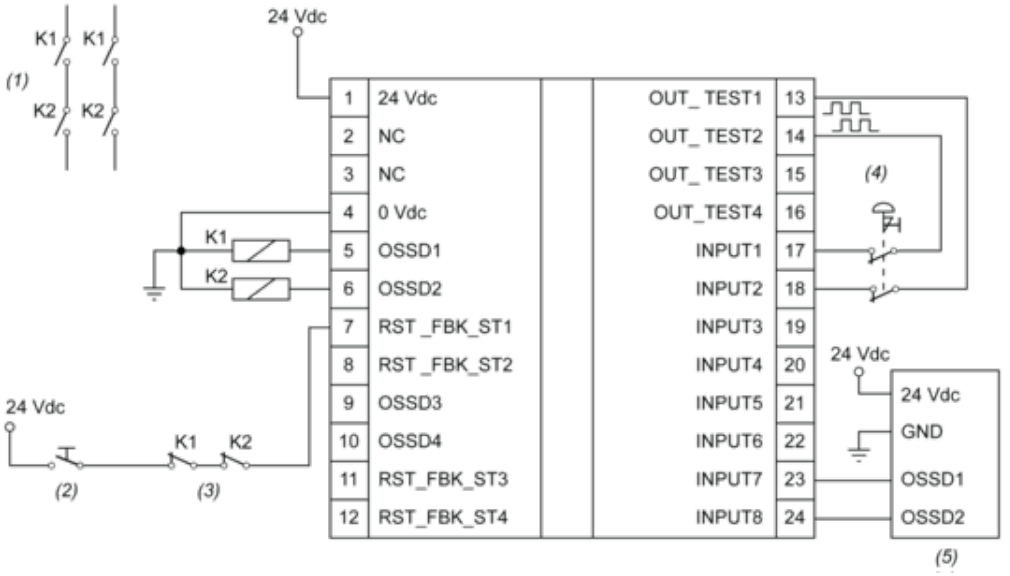

(1) : Contactors
(2) : Restart
(3) : Feedback
(4) : Emergency stop
(5) : Light curtain

Technical Illustration

Dimensions

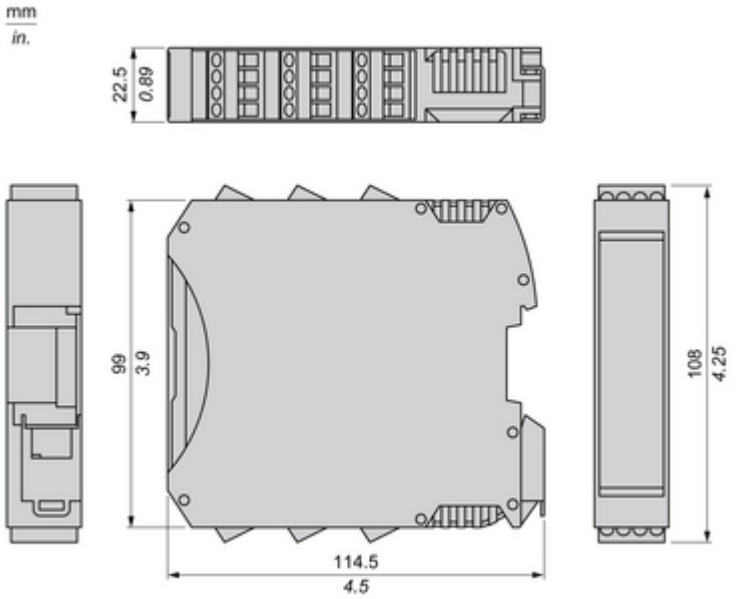

Image of product / Alternate images

Alternative



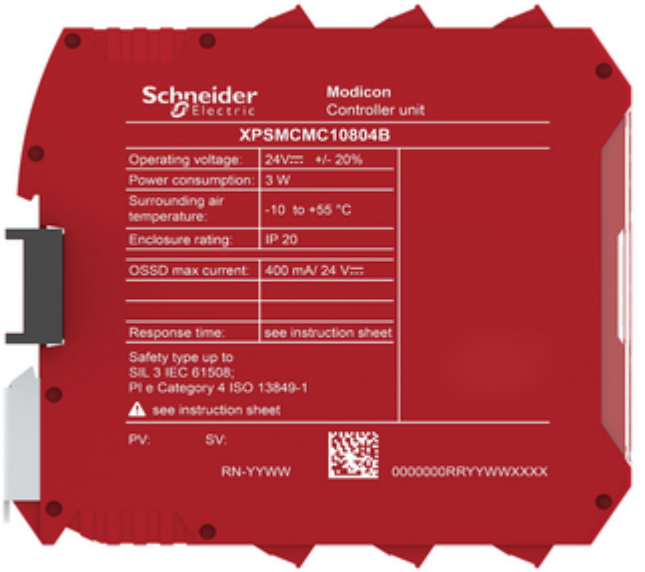

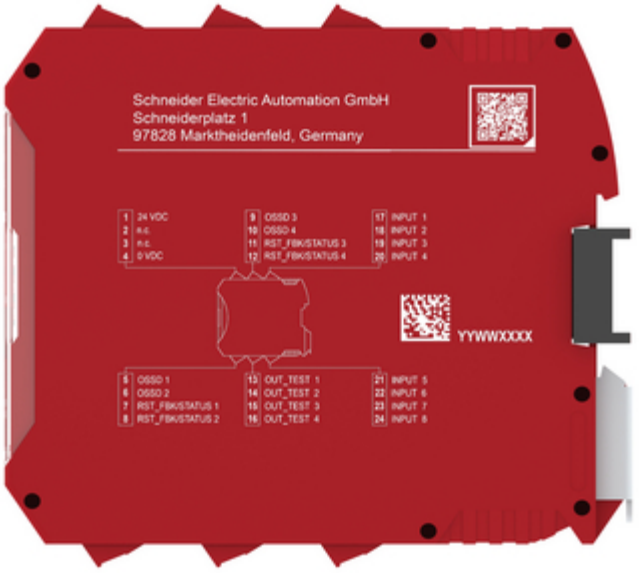
Schneider Electric Automation GmbH
Schneiderplatz 1
97828 Marktheidenfeld, Germany
1 24 VDC
2 n.c.
3 n.c.
4 0 VDC
9 OSSD 3
10 OSSD 4
11 RST_FBK/STATUS 3
12 RST_FBK/STATUS 4
17 INPUT 1
18 INPUT 2
19 INPUT 3
20 INPUT 4
YYWWXXXX
5 OSSD 1
6 OSSD 2
7 RST_FBK/STATUS 1
8 RST_FBK/STATUS 2
13 OUT_TEST 1
14 OUT_TEST 2
15 OUT_TEST 3
16 OUT_TEST 4
21 INPUT 5
22 INPUT 6
23 INPUT 7
24 INPUT 8






Modicon
PWR
RUN
E IN
E EX
COM
EN
C10804
IN
USB
OSSD
RST /FBK/
STATUS
Schneider
Electric