Product data sheet

Specifications



Discrete output module, Modicon X80, 16 isolated triac outputs, 24 to 240V AC, for severe environments

BMXDAO1615H

Product availability: Stock - Normally stocked in distribution facility

Main

Range of Product	Modicon X80
Product or Component Type	Discrete output module

Complementary

Response time on output	<= 10 ms resistive activation <= 10 ms resistive deactivation
Maximum voltage drop	<1.55 V at state 1
Insulation resistance	> 10 MOhm 500 V DC
Current per channel	1.2 A 140 °F (60 °C) 0.6 A 158 °F (70 °C)
Maximum current per module	4 A 140 °F (60 °C) 2 A 158 °F (70 °C)
Inrush current	30 A
Output current limits	0.005…10 A
MTBF reliability	500000 H
Protection type	1 external fuse 4 A fast blow
Product Weight	0.582 lb(US) (0.264 kg)

Environment

IP Degree of Protection	IP20
Protective treatment	Conformal coating
Dielectric strength	3000 V AC 50/60 Hz 1 min
Relative humidity	5…95 % -13…158 °F (-25…70 °C) without condensation
Environmental characteristic	Gas resistant class Gx Gas resistant class 3C4 Dust resistant class 3S4 Sand resistant class 3S4 Salt resistant level 2 Mold growth resistant class 3B2

Ordering and shipping details

Category	US1PC3418160
Discount Schedule	PC34
GTIN	3606489485054
Returnability	Yes
Country of origin	US

Price is “List Price” and may be subject to a trade discount – check with your local distributor or retailer for actual price.

Disclaimer: This documentation is not intended as a substitute for and is not to be used for determining suitability or reliability of these products for specific user applications

Packing Units

Unit Type of Package 1	PCE
Nbr. of units in pkg.	1
Package 1 Height	2.205 in (5.600 cm)
Package 1 Width	7.087 in (18.000 cm)
Package 1 Length	10.315 in (26.200 cm)
Package weight(Lbs)	14.462 oz (410.000 g)
Unit Type of Package 2	S03
Number of Units in Package 2	8
Package 2 Height	11.811 in (30.000 cm)
Package 2 Width	11.811 in (30.000 cm)
Package 2 Length	15.748 in (40.000 cm)
Package 2 Weight	8.283 lb(US) (3.757 kg)

Contractual warranty

Warranty (in months)	18

Environmental Data

Schneider Electric aims to achieve Net Zero status by 2050 through supply chain partnerships, lower impact materials, and circularity via our ongoing “Use Better, Use Longer, Use Again” campaign to extend product lifetimes and recyclability.

Environmental Data explained >

How we assess product sustainability >

Environmental footprint

Total lifecycle Carbon footprint	**35 kg CO2 eq.**
Carbon footprint of the manufacturing phase [A1 to A3]	**23 kg CO2 eq.**
Carbon footprint of the distribution phase [A4]	**0.1 kg CO2 eq.**
Carbon footprint of the installation phase [A5]	**0.3 kg CO2 eq.**
Carbon footprint of the use phase [B2, B3, B4, B6]	**11 kg CO2 eq.**
Carbon footprint of the end-of-life phase [C1 to C4]	**0.5 kg CO2 eq.**
Environmental Disclosure	**Product Environmental Profile**

Use Better

Materials and Substances

Packaging made with recycled cardboard	**Yes**
Packaging without single use plastic	**Yes**
SCIP Number	**43b0fbab-d94b-43e8-be0a-0b39cadd288b**
EU RoHS Directive	**Compliant By Exemption**
REACh Regulation	**Reference contains Substances of Very High Concern above the threshold**
California proposition 65	**WARNING: This product can expose you to chemicals including: Lead and lead compounds, which is known to the State of California to cause cancer and birth defects or other reproductive harm. For more information go to www.P65Warnings.ca.gov**

Use Longer

Lifetime extension

Repair	**No**

Use Again

Repack and remanufacture

Recyclability potential, in %	**0**
Circularity Profile	**End of Life Information**
Take-back	**No**

Dimensions Drawings

Dimensions

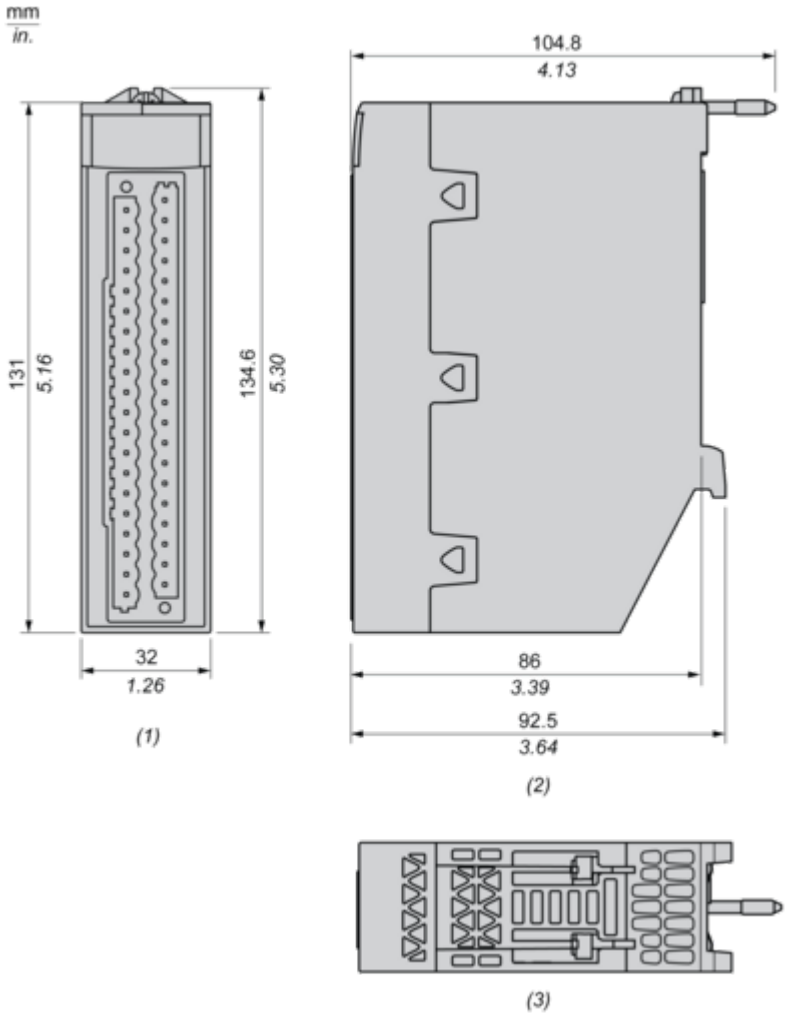

(1) Front view
(2) Right view
(3) Top view

Connections and Schema

Connecting the Module

Output Circuit Diagram

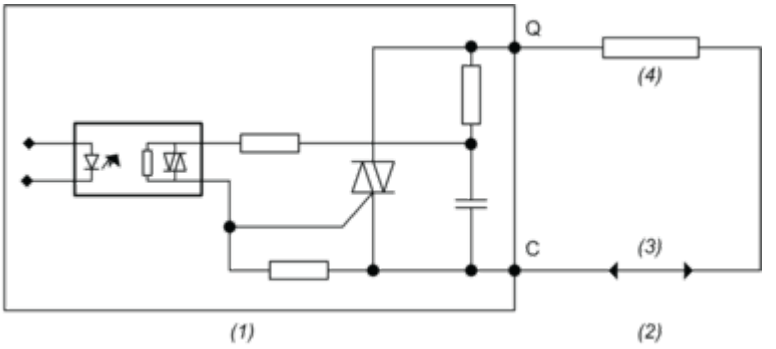

(1) Module
(2) Output
(3) Power supply
(4) Pre-actuator

Module Connection

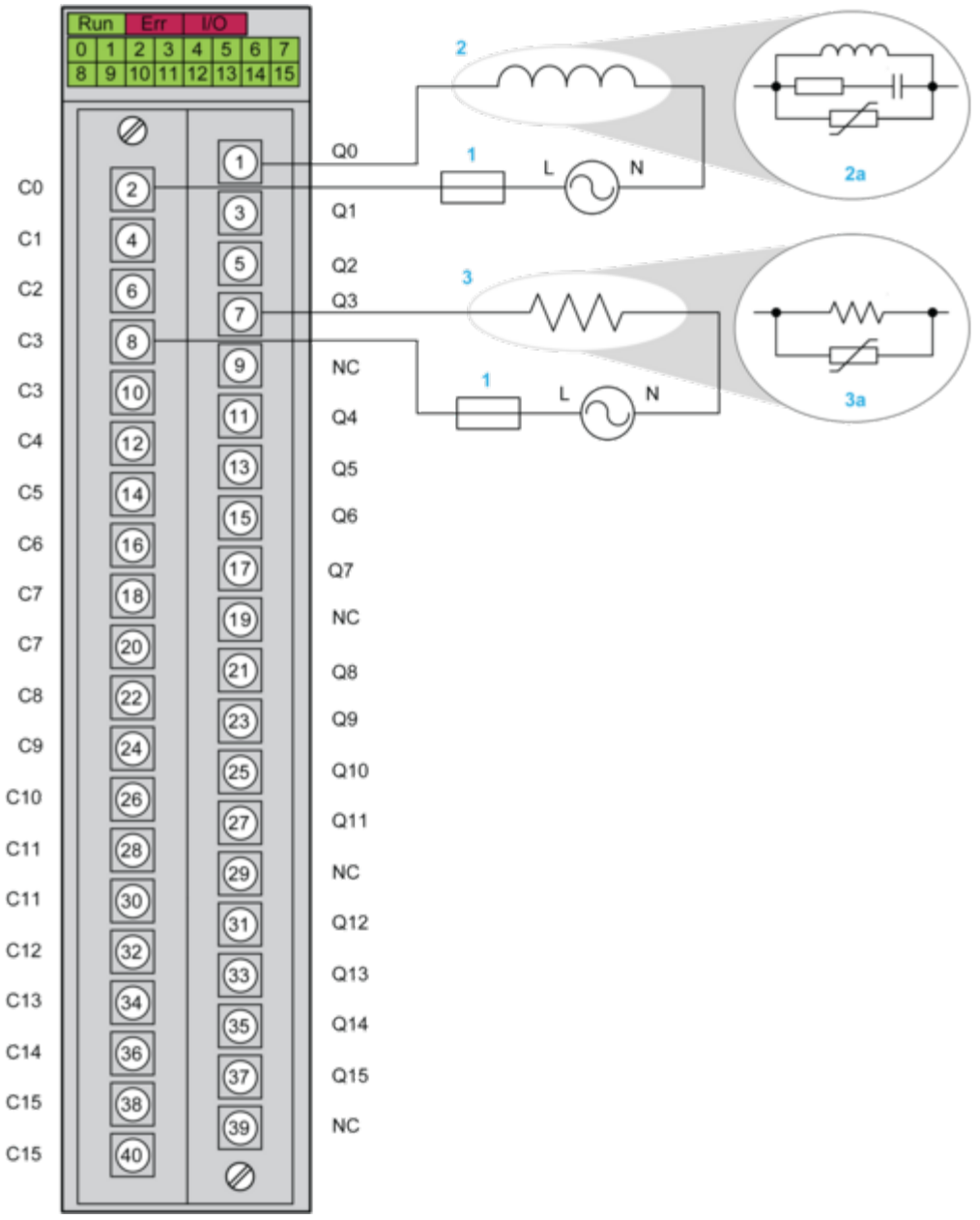

NC: Not connected
1 : 4 A fast blow fuse
2 : Inductive load
3 : Resistive load
2a and 3a : Recommended output protection

Image of product / Alternate images

Alternative












Schneider
Electric
Modicon
BMXDAO1615H
DIG 16X1 TRIAC OUT 24
TO 240 VAC
DOM : XXXX