Product data sheet

Specifications



integrated drive ILA with servo motor - 24..48 V - EtherNet/IP - indus connector

ILA2K572TC2A0

Product availability : Non-Stock - Not normally stocked in distribution facility

Price* : 2,420.00 USD

Main

Range of product	Lexium integrated drive
Product or Component Type	Motion integrated drive
Device short name	ILA
Motor Type	AC Synchronous Servo Motor
Number of motor poles	6
Phase	Single phase
[Us] rated supply voltage	24 V 48 V
Network type	DC
Communication interface	Ethernet/IP, Integrated
Length	8.18 in (207.8 mm)
Winding type	High speed of rotation and medium torque
Electrical Connection	Industrial connector
Holding brake	Without
Gear box type	Without
Nominal speed	3000 rpm 24 V 5100 rpm 48 V
Nominal torque	5.04 lbf.in (0.57 N.m)

Complementary

Transmission Rate	125, 250, 500 kbauds
Mounting Support	Flange
Motor flange size	2.24 in (57 mm)
Number of motor stacks	2
Centring collar diameter	1.97 in (50 mm)
Centring collar depth	0.06 in (1.6 mm)
Number of mounting holes	4
Mounting holes diameter	0.20 in (5.2 mm)
Circle diameter of the mounting holes	2.62 in (66.6 mm)

* Price is “List Price” and may be subject to a trade discount – check with your local distributor or retailer for actual price.

Disclaimer: This documentation is not intended as a substitute for and is not to be used for determining suitability or reliability of these products for specific user applications

Feedback type	Multi turn encoder
Shaft end	Untapped
Second shaft	Without second shaft end
Shaft diameter	0.35 in (9 mm)
Shaft length	0.79 in (20 mm)
Supply voltage limits	18…55.2 V
Current consumption	7500 mA maximum continuous 9000 mA peak
Associated fuse rating	16 A
Commissioning interface	RS485 Modbus TCP 9.6, 19.2 and 38.4 kbauds)
Input/Output type	4 signals (each be used as input or output)
Voltage state 0 guaranteed	-3...4.5 V
Voltage state 1 guaranteed	15...30 V
Discrete input current	10 mA at 24 V safety input 2 mA at 24 V 24 V signal interface
Discrete output voltage	23...25 V
Maximum switching current	100 mA per output 200 mA total
Protection Type	Short circuit of the output voltage Safe torque off Overload of output voltage
Peak stall torque	7.52 lbf.in (0.85 N.m)
Continuous stall torque	5.04 lbf.in (0.57 N.m)
Speed feedback resolution	16384 points/turn x 4096 turns
Accuracy error	+/- 0.05 °
Rotor inertia	0.173 kg.cm²
Maximum radial force Fr	107 N
Maximum axial force Fa	104 N force pressure) 104 N tensile force)
Service life in hours	20000 h bearing
Marking	CE
Type of cooling	Natural convection
Net Weight	3.75 lb(US) (1.7 kg)

Environment

Standards	EN 61800-3:2001, second environment EN 50347 IEC 61800-3, Ed 2 EN 61800-3 : 2001-02 EN/IEC 61800-3 IEC 60072-1 EN/IEC 50178
Product Certifications	cUL UL TÜV
Ambient air temperature for operation	104…131 °F (40…55 °C) with power derating of 2 % per °C) 32…104 °F (0…40 °C) without derating)
Permissible ambient air temperature around the device	221 °F (105 °C) power amplifier 230 °F (110 °C) motor
Ambient Air Temperature for Storage	-13…158 °F (-25…70 °C)
Operating altitude	<= 3280.84 ft (1000 m) without derating

Relative humidity	15…85 % without condensation
Vibration resistance	20 m/s² 10…500 Hz) 10 cycles EN/IEC 60068-2-6
Shock resistance	150 m/s² 1000 shocks EN/IEC 60068-2-29
IP degree of protection	Shaft bushing IP41 EN/IEC 60034-5 Total except shaft bushing IP54 EN/IEC 60034-5

Ordering and shipping details

Category	18288 - LEXIUM INTEGRATED DRIVES II
Discount Schedule	PC56
GTIN	3606485204666
Nbr. of units in pkg.	1
Package weight(Lbs)	4.41 lb(US) (2 kg)
Returnability	No
Country of origin	DE

Packing Units

Unit Type of Package 1	PCE
Package 1 Height	3.15 in (8 cm)
Package 1 width	7.28 in (18.5 cm)
Package 1 Length	13.98 in (35.5 cm)

Offer Sustainability

Sustainable offer status	Green Premium product
California proposition 65	WARNING: This product can expose you to chemicals including: Lead and lead compounds, which is known to the State of California to cause cancer and birth defects or other reproductive harm. For more information go to www.P65Warnings.ca.gov
REACh Regulation	REACh Declaration
EU RoHS Directive	Pro-active compliance (Product out of EU RoHS legal scope) EU RoHS Declaration
Mercury free	Yes
RoHS exemption information	Yes
China RoHS Regulation	China RoHS declaration
Environmental Disclosure	Product Environmental Profile
Circularity Profile	End of Life Information
WEEE	The product must be disposed on European Union markets following specific waste collection and never end up in rubbish bins.
PVC free	Yes

Contractual warranty

Warranty	18 months

Product data sheet ILA2K572TC2A0

Dimensions Drawings

Integrated Drive without Holding Brake

Dimensions

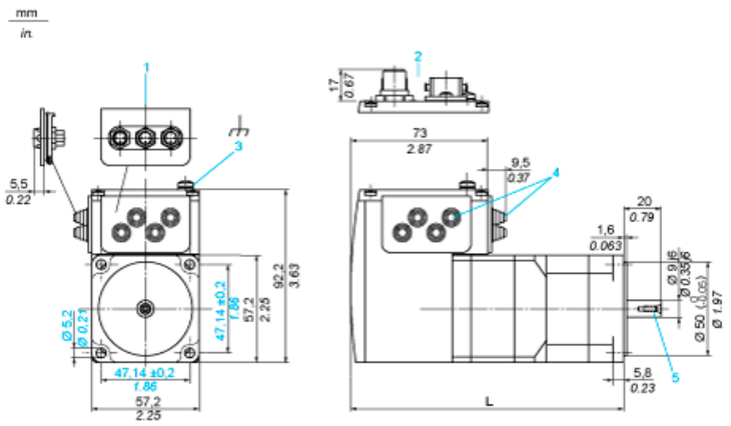

1 Accessories: I/O signal insert with industrial connectors
2 Option: industrial connectors
3 Earth (ground) terminal
4 Accessories: cable entries Ø = 3 ... 9 mm/0.12 ... 0.35 in.
5 Centring hole DIN 332 - DS M3
L : 197.3 mm/7.77 in.

Connection Example with 4 I/O Signals

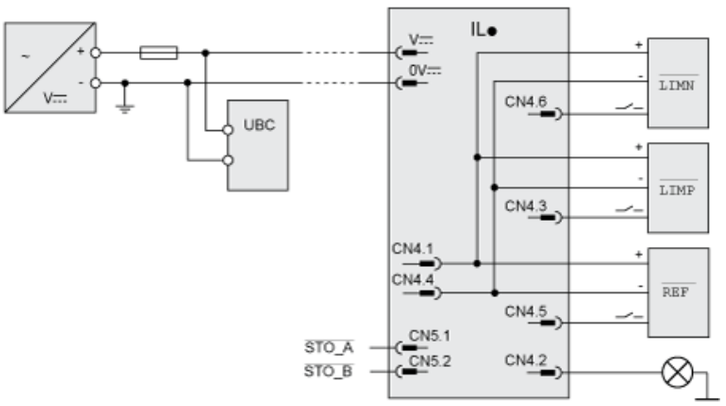

Torque Characteristics

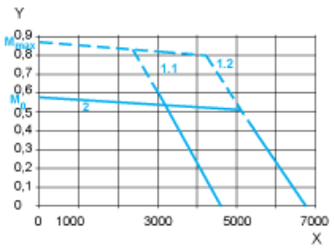

X Speed of rotation in rpm
Y Torque in Nm
1.1 Max. torque at 24 V
1.2 Max. torque at 48 V
2 Continuous torque