Product data sheet

Specifications



IIoT Edge Box Core, Harmony iPC, eMMC DC Linux TPM

HMIBSCEA53D1L0T

Product availability : Non-Stock - Not normally stocked in distribution facility

Price* : 920.00 USD

Main

Range of product	Harmony iPC
Product or Component Type	IIoT Edge Box Core
Device short name	IIoT Edge Box Core
Free slots	1 SD card SD 3.0, max raw transfer rate 104 MBps Supports SD,SDHC,SDXC (Standard 32 mm x 24 mm)
Operating system	Linux Yocto Linux Yocto project Krogoth 2.1) Linux Yocto BitBake branch 1.30.0) Linux Yocto Linux Kernel 4.4.38)
Software package	Node-RED and system nodes default IIoT Wiring

Complementary

Range Compatibility	HMIYMIN4GUS1 Interface Mini PCIe 4G US for iPC HMIYMIN4GEU1 Interface Mini PCIe 4G EU for iPC HMIYMIN8AI1 Interface Mini PCIe 8x Analog Input 0-10V HMIYBIN2AIM21 Interface M.2 2x Analog Input 0-10V/4-20mA
Accessory / separate part destination	Celullar 4G and analog Inputs
Mounting Location	Book mounting Flat mounting Wall mounting
Processor name	ARM Cortex-A53 Quad core Qualcomm Snapdragon 410
Data storage equipment	8 GB eMMC (soldered)
Memory description	1 GB RAM LPDDR3 internal not expandable)
Number of slots	1 mini PCI Express full-size 1 M.2
Display resolution	1920 x 1080 pixels at 60 Hz
Watchdog timer	1…255 ms
Type of cooling	Fanless
Electrical connection	Screw connector pin, 1 way ground bottom Connector SMA top
Integrated connection type	HDMI For configuration only 1 bottom Ethernet 2 RJ45 SMSC LAN7500 10/100/1000 Mbps bottom IEEE 1588 not supported COM1 serial link battery backup 1 male SUB-D 9 RS232/422/485 non-isolated USB 2.0 port 2.0 USB type A 480 Mbit/s bottom TPM connector Ver 2.0 cyber security - hardware encryption TPM module by default motherboard
Communication network type	Wi-Fi IEEE 802.11 b/g/n Bluetooth 4.1

* Price is “List Price” and may be subject to a trade discount – check with your local distributor or retailer for actual price.

Disclaimer: This documentation is not intended as a substitute for and is not to be used for determining suitability or reliability of these products for specific user applications

Cyber secured boot	Secure password boot
Connector type	1.0 x GPIO Pin bottom
[Us] rated supply voltage	24 V DC power supply 100...240 V AC power supply
Supply voltage limits	12…24 V
Inrush current	0.43 A
Power consumption in W	16 W
Control type	Resettable
Depth	1.81 in (46 mm)
Height	5.91 in (150 mm)
Width	6.18 in (157 mm)
Net Weight	2.20 lb(US) (1 kg)
Number of slots available for expansion	1.0 mini PCIe 1.0 M.2 (not for storage)

Environment

Standards	Class A group 1 EN 55011 EN 61000-6-4 EN 61131-2 FCC part 15 UL 60950
Product certifications	CE CULus UL 60950 for IT equipments CCC RCM EAC RED FCC RF IC SRRC TELEC FAC ANATEL
Quality labels	CE
Directives	2004/108/EC - electromagnetic compatibility 2006/95/EC - low voltage directive
IP degree of protection	IP40 conforming to IEC 60529
Electromagnetic compatibility	Immunity to high frequency interference IEC 61000-4 Disturbing field emissionclass A EN 55011 Conducted and radiated emissionsclass A EN 55022
Ambient air temperature for storage	-4…140 °F (-20…60 °C) IEC 60068-2-2 -4…140 °F (-20…60 °C) IEC 60068-2-14
Relative Humidity	10…95 % non-condensing EN/IEC 60068-2-30
Ambient air temperature for operation	32…122 °F (0…50 °C) by default) EN/IEC 60068-2-2 32…122 °F (0…50 °C) flat mounting 32…113 °F (0…45 °C)mini PCIe 32…113 °F (0…45 °C) flat mountingmini PCIe
Operating altitude	6561.68 ft (2000 m) EN/IEC 60664-1
Vibration resistance	2 gn 5…500 Hz) eMMC

Ordering and shipping details

Category	22577 - EDGE BOX IPC
Discount Schedule	MC2
GTIN	3606489740450
Nbr. of units in pkg.	1
Package weight(Lbs)	3.00 lb(US) (1.362 kg)

Returnability	No

Packing Units

Unit Type of Package 1	PCE
Package 1 Height	3.35 in (8.5 cm)
Package 1 width	8.66 in (22 cm)
Package 1 Length	12.60 in (32 cm)
Unit Type of Package 2	S04
Number of Units in Package 2	6
Package 2 Weight	19.71 lb(US) (8.942 kg)
Package 2 Height	11.81 in (30 cm)
Package 2 width	15.75 in (40 cm)
Package 2 Length	23.62 in (60 cm)

Offer Sustainability

Sustainable offer status	Green Premium product
California proposition 65	WARNING: This product can expose you to chemicals including: Lead and lead compounds, which is known to the State of California to cause cancer and birth defects or other reproductive harm. For more information go to www.P65Warnings.ca.gov
REACh Regulation	REACh Declaration
EU RoHS Directive	Pro-active compliance (Product out of EU RoHS legal scope) EU RoHS Declaration
Mercury free	Yes
RoHS exemption information	Yes
China RoHS Regulation	China RoHS declaration
Environmental Disclosure	Product Environmental Profile
Circularity Profile	End of Life Information
WEEE	The product must be disposed on European Union markets following specific waste collection and never end up in rubbish bins.

Dimensions

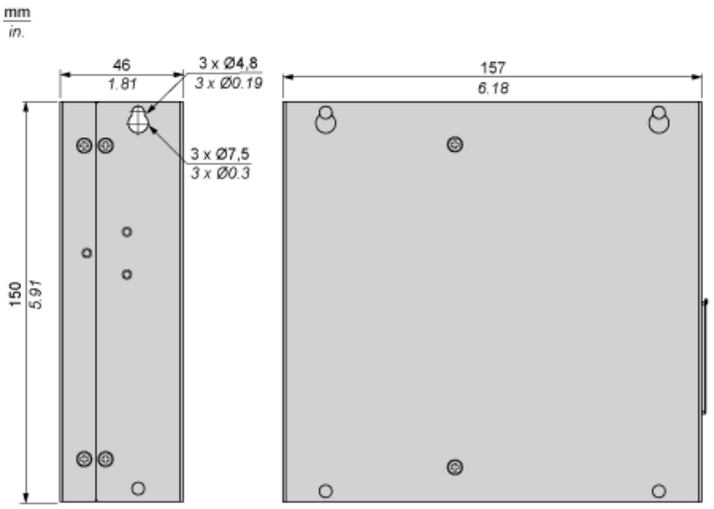

Spacing Requirements

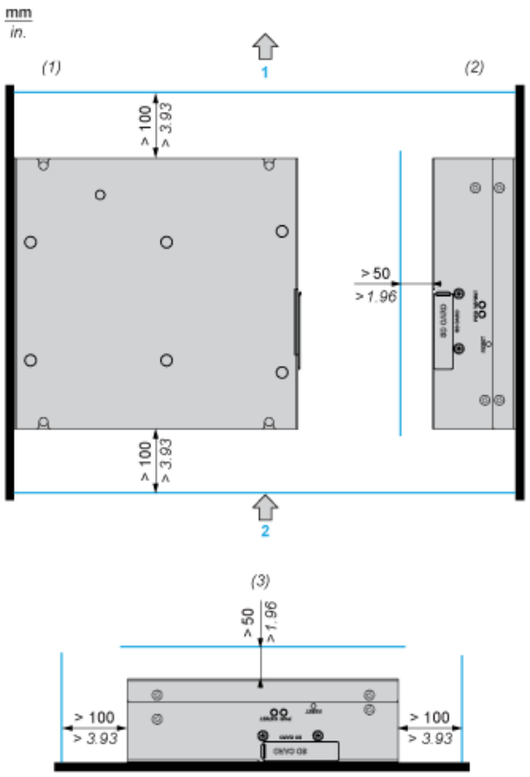

1 : Air out
2 : Air in
(1) Book mounting : Vertical mounting with rear fixing
(2) Wall mounting : Vertical mounting with side fixing
(3) Horizontal mounting