Product data sheet

Specifications



logic controller, Modicon M241, 40 IO, relay

TM241C40R

Product availability: Non-Stock - Not normally stocked in distribution facility

Main

Range of Product	Modicon M241
Product or Component Type	Logic controller
[Us] rated supply voltage	100...240 V AC
Discrete input number	24, discrete input 8 fast input IEC 61131-2 Type 1
Discrete output type	Relay Transistor
Discrete output number	4 transistor 4 fast output 12 relay
Discrete output voltage	5...125 V DC relay output 5...250 V AC relay output 24 V DC transistor output
Discrete output current	0.1 A fast output (PTO mode) TR0...TR3) 2 A relay output Q4...Q15) 0.5 A transistor output TR0...TR3)

Complementary

Discrete I/O number	40
Maximum number of I/O expansion module	7 (local I/O-Architecture) 14 (remote I/O-Architecture)
Supply voltage limits	85…264 V
Network Frequency	50/60 Hz
Discrete input logic	Sink or source
Discrete input voltage	24 V
Discrete input voltage type	DC
Voltage state 1 guaranteed	>= 15 V input
Voltage state 0 guaranteed	<= 5 V input
Discrete input current	7 mA input
Input impedance	4.7 kOhm input
Response time	50 µs turn-on, I0...I15 input
Configurable filtering time	1 s fast input
Discrete output logic	Positive logic (source)
Output voltage limits	125 V DC relay output 30 V DC transistor output 277 V AC relay output
Maximum output frequency	1 kHz transistor output 20 kHz fast output (PWM mode) 100 kHz fast output (PLS mode)

Price is “List Price” and may be subject to a trade discount – check with your local distributor or retailer for actual price.

Disclaimer: This documentation is not intended as a substitute for and is not to be used for determining suitability or reliability of these products for specific user applications

Accuracy	+/- 0.1 % 0.02…0.1 kHz fast output
Protection type	Short-circuit protection transistor output Short-circuit and overload protection with automatic reset transistor output Reverse polarity protection transistor output Without protection relay output
Reset time	10 ms automatic reset output 12 s automatic reset fast output
Memory capacity	64 MB system memory RAM
Data backed up	128 MB built-in flash memory backup of user programs
Data storage equipment	<= 16 GB SD card optional)
Battery type	BR2032 lithium non-rechargeable 4 year(s)
Backup time	2 years 77 °F (25 °C)
Execution time for 1 KInstruction	0.3 ms event and periodic task 0.7 ms other instruction
Application structure	4 cyclic master tasks 3 cyclic master tasks + 1 freewheeling task 8 external event tasks 8 event tasks
Realtime clock	With
Clock drift	<= 60 s/month 77 °F (25 °C)
Positioning functions	PTO 4 100 kHz)
Counting input number	4 fast input (HSC mode) 200 kHz 14 standard input 1 kHz
Control signal type	A/B 100 kHz fast input (HSC mode) Pulse/direction 200 kHz fast input (HSC mode) Single phase 200 kHz fast input (HSC mode)
Integrated connection type	Non isolated serial link serial 1 RJ45 RS232/RS485 Non isolated serial link serial 2 removable screw terminal block RS485 USB port mini B USB 2.0
Supply	Serial 1)serial link supply 5 V, <200 mA
Transmission rate	1.2...115.2 kbit/s (115.2 kbit/s by default) 49.2 ft (15 m) RS485 1.2...115.2 kbit/s (115.2 kbit/s by default) 9.8 ft (3 m) RS232 480 Mbit/s 9.8 ft (3 m) USB
Communication port protocol	Non isolated serial link Modbus master/slave
Local signalling	1 LED (green) for PWR 1 LED (green) for RUN 1 LED (red) for module error (ERR) 1 LED (red) for I/O error (I/O) 1 LED (green) for SD card access (SD) 1 LED (red) for BAT 1 LED (green) for SL1 1 LED (green) for SL2 1 LED (red) for bus fault on TM4 (TM4) 1 LED per channel (green) for I/O state
Electrical connection	removable screw terminal block for inputs and outputs pitch 5.08 mm) removable screw terminal block for connecting the 24 V DC power supply pitch 5.08 mm)
Maximum cable distance between devices	Unshielded cable <164.04 ft (50 m) input Shielded cable <32.8 ft (10 m) fast input Unshielded cable <164.04 ft (50 m) output Shielded cable <9.8 ft (3 m) fast output
Insulation	Between supply and internal logic 500 V AC Non-insulated between supply and ground
Marking	CE
Sensor power supply	24 V DC 400 mA supplied by the controller

Surge withstand	2 kV power lines (AC) common mode IEC 61000-4-5 2 kV relay output common mode IEC 61000-4-5 1 kV shielded cable common mode IEC 61000-4-5 1 kV power lines (AC) differential mode IEC 61000-4-5 1 kV relay output differential mode IEC 61000-4-5 1 kV input common mode IEC 61000-4-5 1 kV transistor output common mode IEC 61000-4-5
Mounting support	Top hat type TH35-15 rail IEC 60715 Top hat type TH35-7.5 rail IEC 60715 plate or panel with fixing kit
Height	3.5 in (90 mm)
Depth	3.7 in (95 mm)
Width	7.5 in (190 mm)
Product Weight	1.37 lb(US) (0.62 kg)

Environment

Standards	ANSI/ISA 12-12-01 CSA C22.2 No 142 CSA C22.2 No 213 IEC 61131-2:2007 Marine specification (LR, ABS, DNV, GL) UL 508
Product Certifications	RCM cULus CE UKCA DNV-GL ABS LR
Resistance to electrostatic discharge	8 kV in air IEC 61000-4-2 4 kV on contact IEC 61000-4-2
Resistance to electromagnetic fields	9.1 V/m (10 V/m) 80 MHz...1 GHz IEC 61000-4-3 2.7 V/m (3 V/m) 1.4 GHz...2 GHz IEC 61000-4-3 0.9 V/m (1 V/m) 2 GHz...3 GHz IEC 61000-4-3
Resistance to fast transients	2 kV IEC 61000-4-4 power lines) 2 kV IEC 61000-4-4 relay output) 1 kV IEC 61000-4-4 serial link) 1 kV IEC 61000-4-4 input) 1 kV IEC 61000-4-4 transistor output)
Resistance to conducted disturbances	10 V 0.15...80 MHz IEC 61000-4-6 3 V 0.1...80 MHz Marine specification (LR, ABS, DNV, GL) 10 V spot frequency (2, 3, 4, 6.2, 8.2, 12.6, 16.5, 18.8, 22, 25 MHz) Marine specification (LR, ABS, DNV, GL)
Electromagnetic emission	Conducted emissions 120...69 dBµV/m QP power lines)10…150 kHz IEC 55011 Conducted emissions 63 dBµV/m QP power lines)1.5…30 MHz IEC 55011 Conducted emissions 79 dBµV/m QP/66 dBµV/m AV power lines)0.15…0.5 MHz IEC 55011 Conducted emissions 73 dBµV/m QP/60 dBµV/m AV power lines)0.5…300 MHz IEC 55011 Radiated emissions 40 dBµV/m QP class A 10 m)30…230 MHz IEC 55011 Conducted emissions 79...63 dBµV/m QP power lines)150…1500 kHz IEC 55011 Radiated emissions 47 dBµV/m QP class A 10 m)230…1000 MHz IEC 55011
Immunity to microbreaks	10 ms
Ambient air temperature for operation	14…122 °F (-10…50 °C) vertical installation) 14…131 °F (-10…55 °C) horizontal installation)
Ambient Air Temperature for Storage	-13…158 °F (-25…70 °C)
Relative humidity	10…95 %, without condensation in operation) 10…95 %, without condensation in storage)
IP degree of protection	IP20 with protective cover in place
Pollution degree	2

Operating altitude	0...6561.68 ft (0...2000 m)
Storage altitude	0…9842.5 ft (0…3000 m)
Vibration resistance	3.5 mm 5…8.4 Hz symmetrical rail 3 gn 8.4…150 Hz symmetrical rail 3.5 mm 5…8.4 Hz panel mounting 3 gn 8.4…150 Hz panel mounting
Shock resistance	15 gn 11 ms

Ordering and shipping details

Category	US10MSX22533
Discount Schedule	0MSX
GTIN	3606480648823
Returnability	No
Country of origin	ID

Packing Units

Unit Type of Package 1	PCE
Nbr. of units in pkg.	1
Package 1 Height	4.449 in (11.300 cm)
Package 1 Width	5.197 in (13.200 cm)
Package 1 Length	9.094 in (23.100 cm)
Package weight(Lbs)	32.875 oz (932.000 g)
Unit Type of Package 2	S03
Number of Units in Package 2	6
Package 2 Height	11.811 in (30.000 cm)
Package 2 Width	11.811 in (30.000 cm)
Package 2 Length	15.748 in (40.000 cm)
Package 2 Weight	13.938 lb(US) (6.322 kg)

Contractual warranty

Warranty (in months)	18

Environmental Data

Schneider Electric aims to achieve Net Zero status by 2050 through supply chain partnerships, lower impact materials, and circularity via our ongoing “Use Better, Use Longer, Use Again” campaign to extend product lifetimes and recyclability.

Environmental Data explained >

How we assess product sustainability >

Environmental footprint

Total lifecycle Carbon footprint	**2 333 kg CO2 eq.**
Carbon footprint of the manufacturing phase [A1 to A3]	**65 kg CO2 eq.**
Carbon footprint of the distribution phase [A4]	**5 kg CO2 eq.**
Carbon footprint of the installation phase [A5]	**0 kg CO2 eq.**
Carbon footprint of the use phase [B2, B3, B4, B6]	**2 261 kg CO2 eq.**
Carbon footprint of the end-of-life phase [C1 to C4]	**2 kg CO2 eq.**
Environmental Disclosure	Product Environmental Profile

Use Better

Materials and Substances

Packaging made with recycled cardboard	**Yes**
Packaging without single use plastic	**No**
SCIP Number	**3d1fb974-648d-4978-8c59-b7dcc486f5a5**
EU RoHS Directive	Compliant By Exemption
REACh Regulation	Reference contains Substances of Very High Concern above the threshold
California proposition 65	**WARNING: This product can expose you to chemicals including: Lead and lead compounds, which is known to the State of California to cause cancer and birth defects or other reproductive harm. For more information go to www.P65Warnings.ca.gov**
PVC free	**Yes**

Use Longer

Lifetime extension

Repair	**No**

Use Again

Repack and remanufacture

Recyclability potential, in %	**3**
Circularity Profile	End of Life Information
Take-back	**No**
WEEE Label	**The product must be disposed on European Union markets following specific waste collection and never end up in rubbish bins.**

Dimensions Drawings

Dimensions

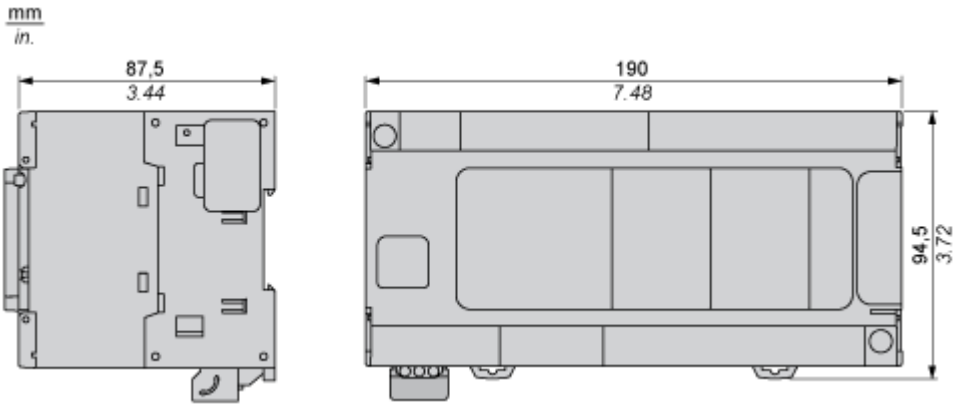

Mounting and Clearance

Clearance

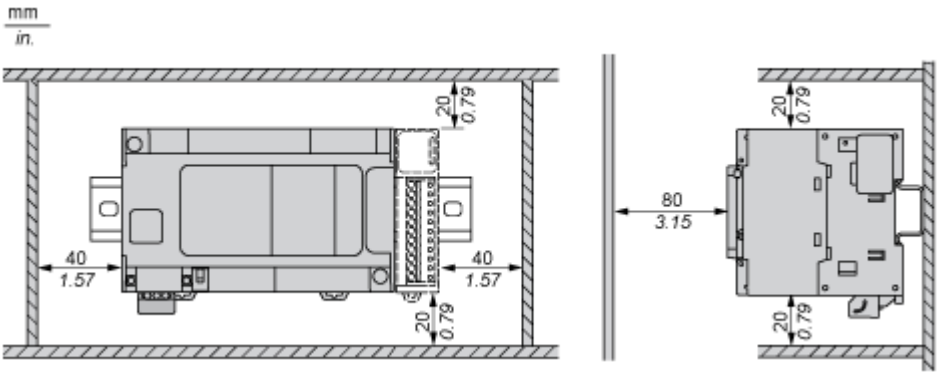

Mounting Position

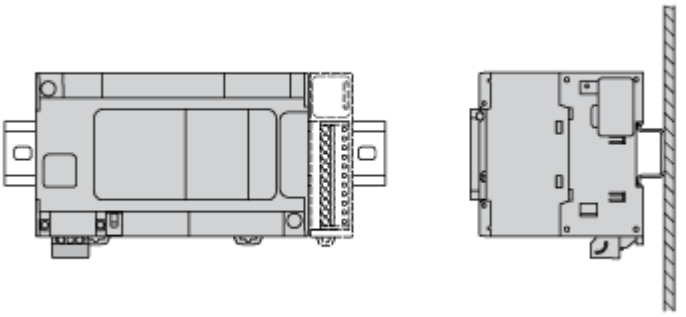

Acceptable Mounting

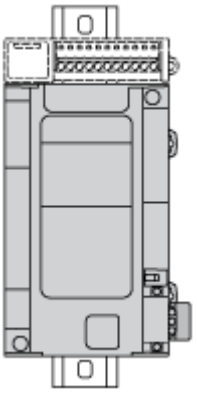

NOTE: Expansion modules must be mounted above the logic controller.

Incorrect Mounting

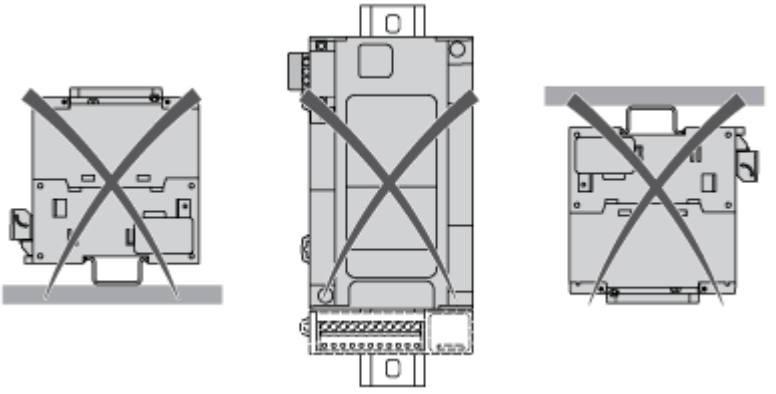

Direct Mounting On a Panel Surface

Mounting Hole Layout

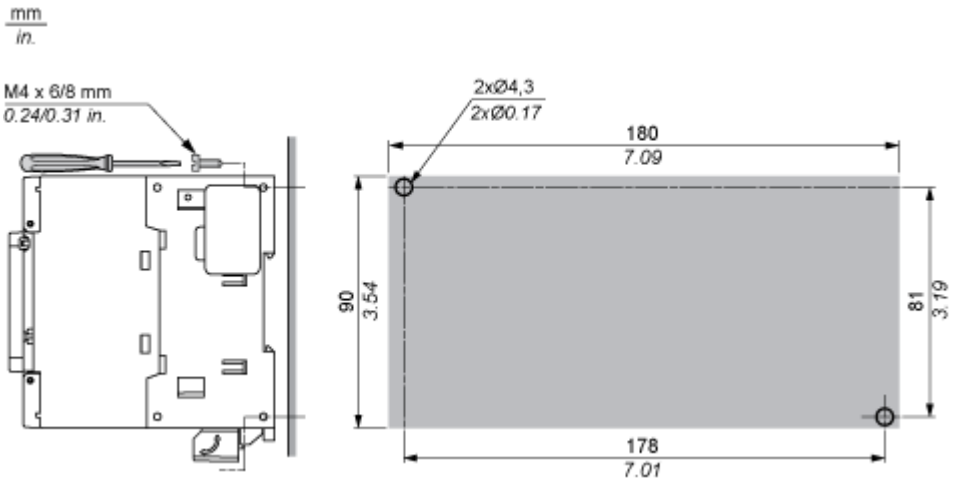

Connections and Schema

Digital Inputs

Wiring Diagram (Positive Logic)

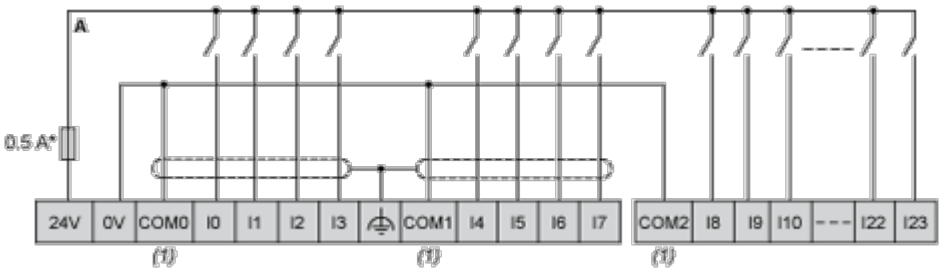

(*) : Type T fuse

(1) : The COM0, COM1 and COM2 terminals are not connected internally.

Wiring Diagram (Negative Logic)

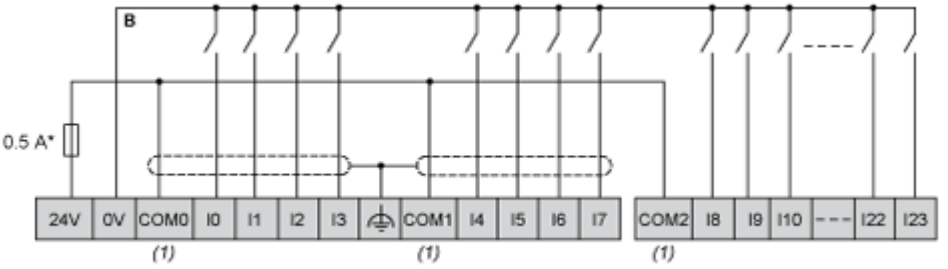

(*) : Type T fuse

(1) : The COM0, COM1 and COM2 terminals are not connected internally.

Fast Transistor Outputs

Wiring Diagram

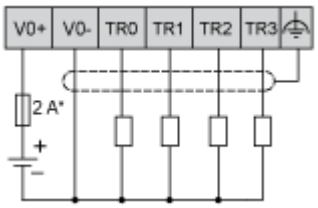

(*) : 2 A fast-blow fuse

Relay Outputs

Wiring Diagram

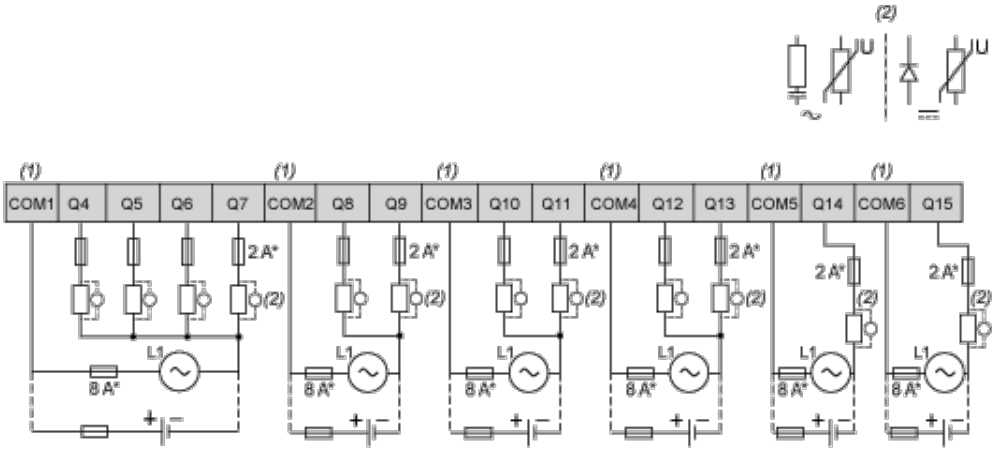

(*) : Type T fuse

(1) : The terminals COM1 to COM6 are not connected internally.

(2) : To improve the life time of the contacts, and to protect from potential inductive load damage, you must connect a free wheeling diode in parallel to each inductive DC load or an RC snubber in parallel of each inductive AC load

USB Mini-B Connection

