# Product data sheet

Specifications



## integrated drive ILS with stepper motor - 24..48 V - EtherNet/IP - 6 A

ILS2K853TB1A0

**Product availability: Non-Stock - Not normally stocked in distribution facility**

## Main

| | |
|---|---|
| **Range of Product** | Lexium integrated drive |
| **Product or Component Type** | Motion integrated drive |
| **Device short name** | ILS |
| **Motor Type** | 3-phase stepper motor |
| **Number of motor poles** | 6 |
| **Phase** | Single phase |
| **[Us] rated supply voltage** | 24 V<br>48 V |
| **Network type** | DC |
| **Communication interface** | Ethernet/IP, Integrated |
| **Length** | 7.9 in (200.6 mm) |
| **Winding type** | High speed of rotation and medium torque |
| **Electrical Connection** | Printed circuit board connector |
| **Holding brake** | Without |
| **Gear box type** | Without |
| **Nominal speed** | 200 rpm 24 V<br>400 rpm 48 V |
| **Nominal torque** | 39.8 lbf.in (4.5 N.m) |
| **Holding torque** | 39.8 lbf.in (4.5 N.m) |

## Complementary

| | |
|---|---|
| **Transmission Rate** | 125, 250, 500 kbauds |
| **Mounting Support** | Flange |
| **Motor flange size** | 3.3 in (85 mm) |
| **Number of motor stacks** | 3 |
| **Centring collar diameter** | 2.4 in (60 mm) |
| **Centring collar depth** | 0.08 in (2 mm) |
| **Number of mounting holes** | 4 |
| **Mounting holes diameter** | 0.3 in (6.5 mm) |
| **Circle diameter of the mounting holes** | 3.9 in (99 mm) |
| **Feedback type** | Index pulse |
| **Shaft end** | Untapped |

Price is “List Price” and may be subject to a trade discount – check with your local distributor or retailer for actual price.

Disclaimer: This documentation is not intended as a substitute for and is not to be used for determining suitability or reliability of these products for specific user applications

| | |
|---|---|
| **Second shaft** | Without second shaft end |
| **Shaft diameter** | 0.6 in (14 mm) |
| **Shaft length** | 1.2 in (30 mm) |
| **Supply voltage limits** | 18…55 V |
| **Current consumption** | 6000 mA maximum continuous |
| **Associated fuse rating** | 16 A |
| **Commissioning interface** | RS485 Modbus TCP 9.6, 19.2 and 38.4 kbauds) |
| **Input/output type** | 4 signals (each be used as input or output) |
| **Voltage state 0 guaranteed** | -3...4.5 V |
| **Voltage state 1 guaranteed** | 15...30 V |
| **Discrete input current** | 10 mA at 24 V safety input<br>2 mA at 24 V 24 V signal interface |
| **Discrete output voltage** | 23...25 V |
| **Maximum switching current** | 100 mA per output<br>200 mA total |
| **Protection Type** | Safe torque off<br>Short circuit of the output voltage<br>Overload of output voltage |
| **Peak stall torque** | 39.8 lbf.in (4.5 N.m) |
| **Continuous stall torque** | 39.8 lbf.in (4.5 N.m) |
| **Speed feedback resolution** | 20000 points/turn |
| **Accuracy error** | +/- 6 arc min |
| **Rotor inertia** | 3.3 kg.cm² |
| **Maximum mechanical speed** | 3000 rpm |
| **Maximum radial force Fr** | 110 N |
| **Maximum axial force Fa** | 170 N tensile force)<br>30 N force pressure) |
| **Service life in hours** | 20000 h bearing |
| **Marking** | CE |
| **Type of cooling** | Natural convection |
| **Product Weight** | 10.4 lb(US) (4.7 kg) |

# Environment

| | |
|---|---|
| **Standards** | IEC 50178<br>EN 61800-3:2001, second environment<br>IEC 60072-1<br>IEC 50347<br>IEC 61800-3<br>IEC 61800-3, Ed 2<br>EN 61800-3 : 2001-02 |
| **Product Certifications** | UL<br>cUL<br>TÜV |
| **Ambient air temperature for operation** | 104…131 °F (40…55 °C) (with power derating of 2 % per °C)<br>32…104 °F (0…40 °C) (without derating) |
| **Permissible ambient air temperature around the device** | 221 °F (105 °C) power amplifier<br>230 °F (110 °C) motor |
| **Ambient Air Temperature for Storage** | -13…158 °F (-25…70 °C) |

| | |
|---|---|
| **Operating altitude** | <= 3280.84 ft (1000 m) without derating |
| **Relative humidity** | 15…85 % without condensation |
| **Vibration resistance** | 20 m/s² 10…500 Hz) 10 cycles IEC 60068-2-6 |
| **Shock resistance** | 150 m/s² 1000 shocks IEC 60068-2-29 |
| **IP degree of protection** | IP41 shaft bushing: conforming to IEC 60034-5<br>IP54 total except shaft bushing: conforming to IEC 60034-5 |

## Ordering and shipping details

| | |
|---|---|
| **Category** | US1PC5618288 |
| **Discount Schedule** | PC56 |
| **GTIN** | 3606485205052 |
| **Returnability** | No |
| **Country of origin** | DE |

## Packing Units

| | |
|---|---|
| **Unit Type of Package 1** | PCE |
| **Nbr. of units in pkg.** | 1 |
| **Package 1 Height** | 4.09 in (10.4 cm) |
| **Package 1 Width** | 7.09 in (18.0 cm) |
| **Package 1 Length** | 14.4 in (36.5 cm) |
| **Package weight(Lbs)** | 11.02 lb(US) (5.0 kg) |

## Contractual warranty

| | |
|---|---|
| **Warranty (in months)** | 18 |

## Environmental Data

Schneider Electric aims to achieve Net Zero status by 2050 through supply chain partnerships, lower impact materials, and circularity via our ongoing “Use Better, Use Longer, Use Again” campaign to extend product lifetimes and recyclability.

Environmental Data explained >

How we assess product sustainability >

### Environmental footprint

| | |
|---|---|
| Total lifecycle Carbon footprint | **741 kg CO2 eq.** |
| Carbon footprint of the manufacturing phase [A1 to A3] | **60 kg CO2 eq.** |
| Carbon footprint of the distribution phase [A4] | **7 kg CO2 eq.** |
| Carbon footprint of the installation phase [A5] | **3 kg CO2 eq.** |
| Carbon footprint of the use phase [B2, B3, B4, B6] | **666 kg CO2 eq.** |
| Carbon footprint of the end-of-life phase [C1 to C4] | **5 kg CO2 eq.** |
| Environmental Disclosure | Product Environmental Profile |

## Use Better

### Materials and Substances

| | |
|---|---|
| Packaging made with recycled cardboard | **Yes** |
| Packaging without single use plastic | **No** |
| SCIP Number | **F800009a-26ea-46d4-b613-164e8055f98f** |
| EU RoHS Directive | Compliant By Exemption |
| REACh Regulation | Reference contains Substances of Very High Concern above the threshold |
| California proposition 65 | **WARNING: This product can expose you to chemicals including: Lead and lead compounds, which is known to the State of California to cause cancer and birth defects or other reproductive harm. For more information go to www.P65Warnings.ca.gov** |

## Use Longer

### Lifetime extension

| | |
|---|---|
| Repair | **No** |

## Use Again

### Repack and remanufacture

| | |
|---|---|
| Recyclability potential, in % | **85** |
| Circularity Profile | End of Life Information |
| Take-back | **No** |

## Dimensions

### Integrated Drive without Holding Brake

### Dimensions

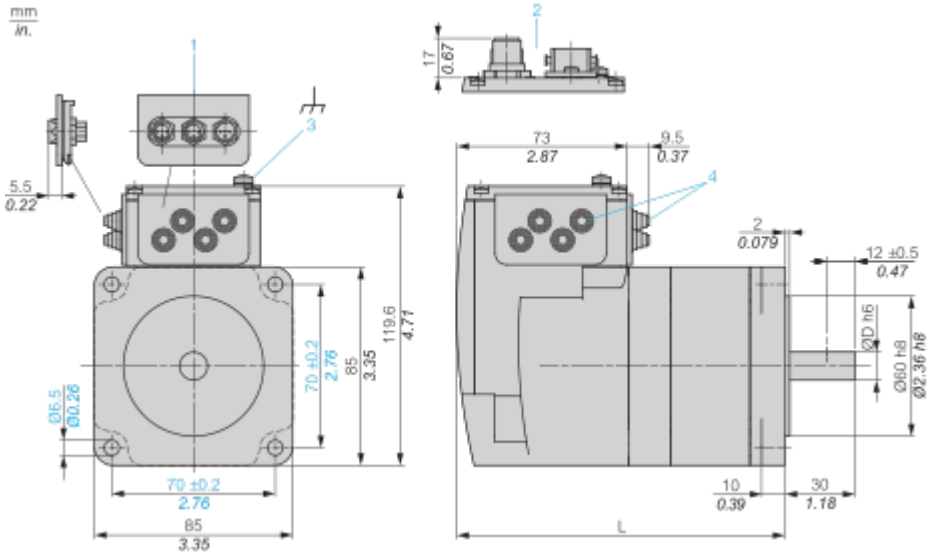


**1 :** Accessories: I/O signal insert with industrial connectors
**2 :** Option: industrial connectors
**3 :** Earth (ground) terminal
**4 :** Accessories: cable entries Ø = 3 ... 9 mm/0.12 ... 0.35 in.
**L :** 200.6 mm/7.90 in.
**D :** 14 mm/0.55 in.

Wiring

**Connection Example with 4 I/O Signals**

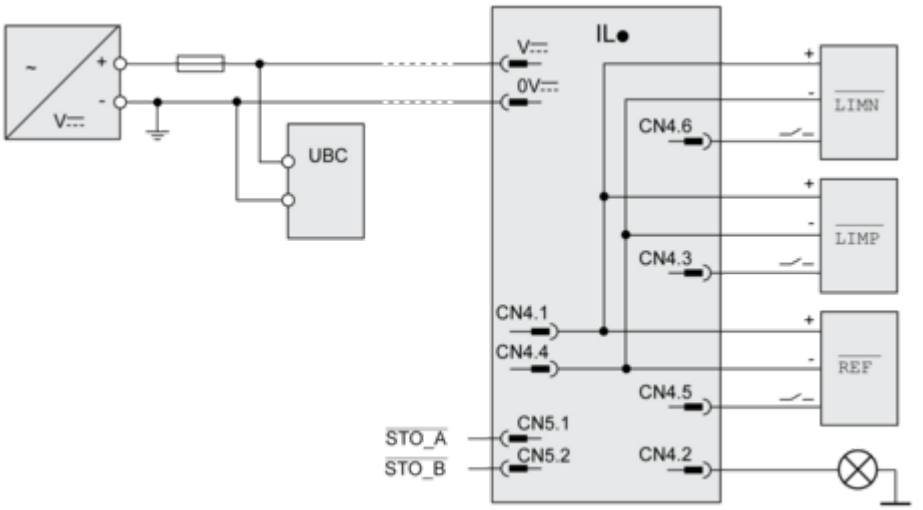

PerformanceCurves

## Torque Characteristics

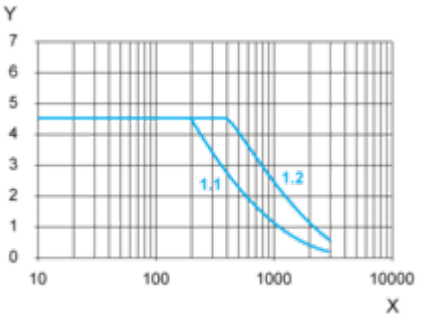


**X** Speed of rotation in rpm
**Y** Torque in Nm
**1.1** Max. torque at 24 V
**1.2** Max. torque at 48 V

Technical Illustration

**Dimensions**

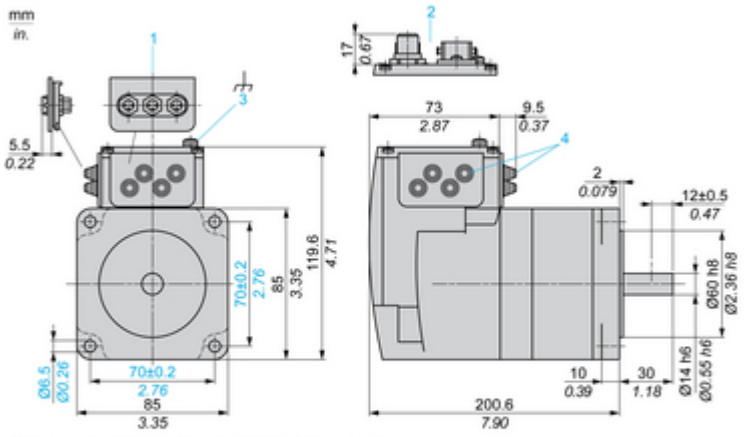


(1) Accessories: I/O signal insert with industrial connectors
(2) Option: industrial connectors
(3) Earth (ground) terminal
(4) Accessories: cable entries Ø = 3 ... 9 mm/0.12 ... 0.35 in.

Technical Illustration

**Wiring diagram**

Connection Example with 4 I/O Signals

