Product data sheet

Specifications



brushless dc motor 24..36 V - CANopen DS301 interface - L = 174 mm - 54:1

ILE1F661PB1A6

Product availability : Non-Stock - Not normally stocked in distribution facility

Price* : 1,440.00 USD

Main

Range of product	Lexium integrated drive
Product or Component Type	Motion integrated drive
Device short name	ILE
Motor Type	Brushless DC motor
Number of motor poles	6
Phase	Single phase
[Us] rated supply voltage	36 V 24 V
Network type	DC
Communication interface	CANopen DS301, Integrated
Length	9.02 in (229 mm)
Winding type	Medium speed of rotation and medium torque
Electrical Connection	Printed circuit board connector
Holding brake	Without
Gear box type	Worm gear, 3 stages
Reduction ratio	54:1 (1715:32)
Nominal speed	75 rpm 24 V 75 rpm 36 V
Nominal torque	51.33 lbf.in (5.8 N.m) 24 V 53.10 lbf.in (6 N.m) 36 V

Complementary

Transmission Rate	50, 100, 125, 250, 500, 800 and 1000 kbauds
Mounting Support	Flange
Motor flange size	2.60 in (66 mm)
Number of motor stacks	1
Centring collar diameter	1.42 in (36 mm)
Number of mounting holes	2
Mounting holes diameter	0.17 in (4.4 mm)
Feedback type	BLDC encoder

* Price is “List Price” and may be subject to a trade discount – check with your local distributor or retailer for actual price.

Disclaimer: This documentation is not intended as a substitute for and is not to be used for determining suitability or reliability of these products for specific user applications

Shaft end	Hole
Second shaft	Without second shaft end
Supply voltage limits	18…40 V
Current consumption	7000 mA peak 5500 mA maximum continuous
Associated fuse rating	10 A
Input/Output type	4 signals (each be used as input or output)
Voltage state 0 guaranteed	-3...4.5 V
Voltage state 1 guaranteed	15...30 V
Discrete input current	10 mA at 24 V on/STO_A safety input 3 mA at 24 V on/STO_B safety input 2 mA at 24 V 24 V signal interface
Discrete output voltage	23...25 V
Maximum switching current	100 mA per output 200 mA total
Protection Type	Safe torque off Overload of output voltage Short circuit of the output voltage
Maximum supply current	0.1 A power stage disabled) 6.8 A 24 V 3.8 A 36 V
Nominal output power	45 W 24 V 47 W 36 V
Peak stall torque	103.20 lbf.in (11.66 N.m) 36 V 74.52 lbf.in (8.42 N.m) 24 V
Continuous stall torque	69.92 lbf.in (7.9 N.m)
Detent torque	57.53 lbf.in (6.5 N.m)
Speed feedback resolution	12 points/turn motor 0.56° gearbox output
Accuracy error	+/- 1 point
Maximum torsional backlash	1 °
Rotor inertia	430 kg.cm²
Maximum mechanical speed	93 rpm
Maximum radial force Fr	200 N
Maximum axial force Fa	80 N
Service life in hours	6000 h bearing
Marking	CE
Type of cooling	Natural convection
Net Weight	5.07 lb(US) (2.3 kg)

Environment

Standards	EN/IEC 61800-3 EN/IEC 50178 EN 61800-3:2001, second environment EN 61800-3 : 2001-02 IEC 61800-3, Ed 2 EN 50347 IEC 60072-1
Product Certifications	cUL UL TÜV
Ambient air temperature for operation	122…149 °F (50…65 °C) with power derating of 2 % per °C) 32…122 °F (0…50 °C) without derating)
Permissible ambient air temperature around the device	221 °F (105 °C) power amplifier 230 °F (110 °C) motor

Ambient Air Temperature for Storage	-13…158 °F (-25…70 °C)
Operating altitude	<= 3280.84 ft (1000 m) without derating
Relative humidity	15…85 % without condensation
Vibration resistance	20 m/s² 10…500 Hz) 10 cycles EN/IEC 60068-2-6
Shock resistance	150 m/s² 1000 shocks EN/IEC 60068-2-29
IP degree of protection	Shaft bushing IP41 EN/IEC 60034-5 Total except shaft bushing IP54 EN/IEC 60034-5

Ordering and shipping details

Category	18288 - LEXIUM INTEGRATED DRIVES II
Discount Schedule	PC56
GTIN	3389119222365
Nbr. of units in pkg.	1
Package weight(Lbs)	4.96 lb(US) (2.25 kg)
Returnability	No
Country of origin	DE

Packing Units

Unit Type of Package 1	PCE
Package 1 Height	3.54 in (9 cm)
Package 1 width	7.48 in (19 cm)
Package 1 Length	15.16 in (38.5 cm)

Offer Sustainability

Sustainable offer status	Green Premium product
California proposition 65	WARNING: This product can expose you to chemicals including: Lead and lead compounds, which is known to the State of California to cause cancer and birth defects or other reproductive harm. For more information go to www.P65Warnings.ca.gov
REACh Regulation	REACh Declaration
EU RoHS Directive	Pro-active compliance (Product out of EU RoHS legal scope) EU RoHS Declaration
Mercury free	Yes
RoHS exemption information	Yes
China RoHS Regulation	China RoHS declaration
Environmental Disclosure	Product Environmental Profile
Circularity Profile	End of Life Information
WEEE	The product must be disposed on European Union markets following specific waste collection and never end up in rubbish bins.
PVC free	Yes

Contractual warranty

Warranty	18 months

Product data sheet ILE1F661PB1A6

Dimensions Drawings

Integrated Drive with Worm Gear

Dimensions

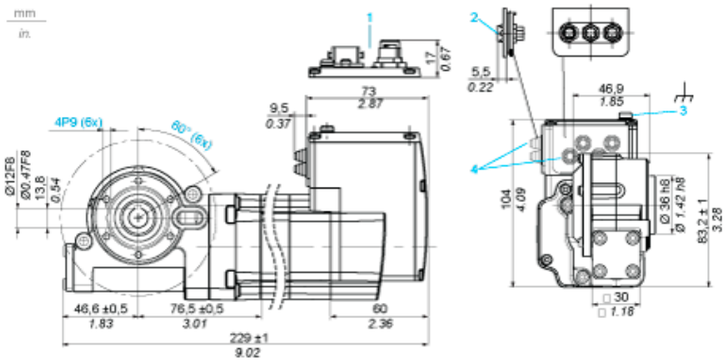

1 Option: industrial connectors
2 Accessories: I/O signal insert with industrial connectors
3 Earth (ground) terminal
4 Accessories: cable entries Ø = 3 ... 9 mm/0.12 ... 0.35 in.

Connection Example with 4 I/O Signals

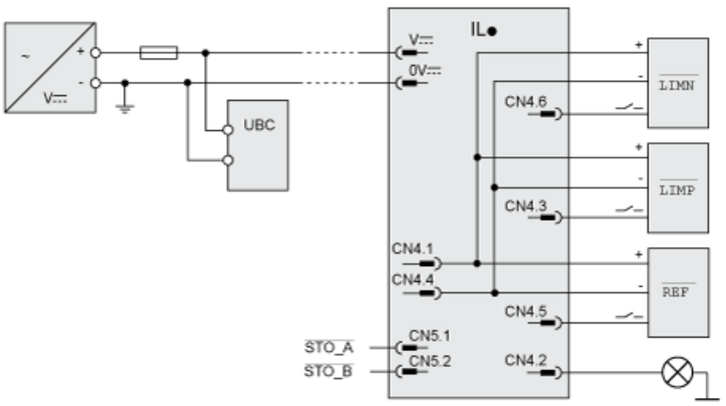

Torque Characteristics

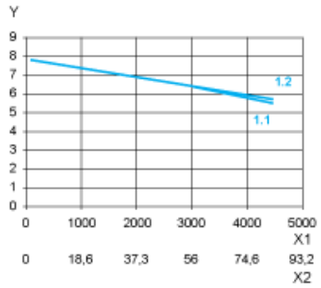

X1 Speed of rotation of motor in rpm
X2 Speed of rotation of gearing in rpm
Y Torque in Nm
1.1 Max. torque at 24 V
1.2 Max. torque at 36 V