Product data sheet

Specifications



servo motor BMH, Lexium 32, 6.2Nm, 6000rpm, keyed shaft, with brake, IP54, 16bit encoder

BMH1002P16F2A

Product availability: Stock - Normally stocked in distribution facility

Main

Device short name	BMH
Product or Component Type	Servo motor
Maximum mechanical speed	6000 rpm
Continuous stall torque	54.9 lbf.in (6.2 N.m) LXM32.D18N4 6 A, 400 V, three phase 54.9 lbf.in (6.2 N.m) LXM32.D18N4 6 A, 480 V, three phase
Peak stall torque	162.9 lbf.in (18.4 N.m) LXM32.D18N4 6 A, 400 V, three phase 162.9 lbf.in (18.4 N.m) LXM32.D18N4 6 A, 480 V, three phase
Nominal output power	1600 W LXM32.D18N4 6 A, 400 V, three phase 1600 W LXM32.D18N4 6 A, 480 V, three phase
Nominal torque	34.5 lbf.in (3.9 N.m) LXM32.D18N4 6 A, 400 V, three phase 34.5 lbf.in (3.9 N.m) LXM32.D18N4 6 A, 480 V, three phase
Nominal speed	4000 rpm LXM32.D18N4 6 A, 400 V, three phase 4000 rpm LXM32.D18N4 6 A, 480 V, three phase
Product compatibility	LXM32.D18N4 400...480 V three phase
Shaft end	Keyed
IP Degree of Protection	IP54 standard
Speed feedback resolution	32768 points/turn
Holding brake	With
Mounting Support	International standard flange
Electrical Connection	Rotatable right-angled connectors

Complementary

Range Compatibility	Lexium 32
[Us] rated supply voltage	480 V
Phase	Three phase
Continuous stall current	5.04 A
Continuous power	2.36 W
Maximum current Irms	17.5 A LXM32.D18N4
Maximum permanent current	18.23 A
Second shaft	Without second shaft end
Shaft diameter	0.7 in (19 mm)
Shaft length	1.6 in (40 mm)
Key width	1.2 in (30 mm)
Feedback type	Single turn SinCos Hiperface

Price is “List Price” and may be subject to a trade discount – check with your local distributor or retailer for actual price.

Disclaimer: This documentation is not intended as a substitute for and is not to be used for determining suitability or reliability of these products for specific user applications

Holding torque	48.7 lbf.in (5.5 N.m) holding brake
Motor flange size	3.9 in (100 mm)
Number of motor stacks	2
Torque constant	1.19 N.m/A 248 °F (120 °C)
Back emf constant	77 V/krpm 248 °F (120 °C)
Number of motor poles	5.0
Rotor inertia	6.77 kg.cm²
Stator resistance	1.51 Ohm 68 °F (20 °C)
Stator inductance	4.12 mH 68 °F (20 °C)
Stator electrical time constant	5 ms 68 °F (20 °C)
Maximum radial force Fr	990 N 1000 rpm 790 N 2000 rpm 690 N 3000 rpm 620 N 4000 rpm 580 N 5000 rpm
Maximum axial force Fa	0.2 x Fr
Brake pull-in power	12 W
Type of cooling	Natural convection
Length	8.0 in (202.3 mm)
Centring collar diameter	3.7 in (95 mm)
Centring collar depth	0.1 in (3.5 mm)
Number of mounting holes	4
Mounting holes diameter	0.4 in (9 mm)
Circle diameter of the mounting holes	4.5 in (115 mm)
Product Weight	14.1 lb(US) (6.4 kg)
Sizing reference	BMH1002P
Network number of phases	3
Accuracy error [angular]	4.8 °
Temperature copper hot	275 °F (135 °C)
Temperature magnet hot	212 °F (100 °C)
Temperature magnet rt	68 °F (20 °C)
Output current 3s peak	17.5 A
Inertia	0.49 kg.cm² of brake 6.279 kg.cm² of motor

Ordering and shipping details

Category	US1PC5318282
Discount Schedule	PC53
GTIN	3606485196152
Returnability	Yes
Country of origin	DE

Packing Units

Unit Type of Package 1	PCE
Nbr. of units in pkg.	1
Package 1 Height	8.661 in (22.000 cm)
Package 1 Width	7.874 in (20.000 cm)
Package 1 Length	15.748 in (40.000 cm)
Package weight(Lbs)	14.947 lb(US) (6.780 kg)
Unit Type of Package 2	P06
Number of Units in Package 2	18
Package 2 Height	55.118 in (140.000 cm)
Package 2 Width	23.622 in (60.000 cm)
Package 2 Length	31.496 in (80.000 cm)
Package 2 Weight	286.601 lb(US) (130.000 kg)

Contractual warranty

Warranty (in months)	18

Environmental Data

Schneider Electric aims to achieve Net Zero status by 2050 through supply chain partnerships, lower impact materials, and circularity via our ongoing “Use Better, Use Longer, Use Again” campaign to extend product lifetimes and recyclability.

Environmental Data explained >

How we assess product sustainability >

Environmental footprint

Total lifecycle Carbon footprint	**1 780 kg CO2 eq.**
Carbon footprint of the manufacturing phase [A1 to A3]	**49 kg CO2 eq.**
Carbon footprint of the distribution phase [A4]	**0.9 kg CO2 eq.**
Carbon footprint of the installation phase [A5]	**0.1 kg CO2 eq.**
Carbon footprint of the use phase [B2, B3, B4, B6]	**1 730 kg CO2 eq.**
Carbon footprint of the end-of-life phase [C1 to C4]	**0.6 kg CO2 eq.**

Use Better

Materials and Substances

Packaging made with recycled cardboard	**Yes**
Packaging without single use plastic	**Yes**
SCIP Number	**A7df881f-135f-4256-b8c2-ea55d4c9a151**
EU RoHS Directive	**Compliant By Exemption**
REACh Regulation	**Reference contains Substances of Very High Concern above the threshold**
California proposition 65	**WARNING: This product can expose you to chemicals including: Lead and lead compounds, which is known to the State of California to cause cancer and birth defects or other reproductive harm. For more information go to www.P65Warnings.ca.gov**
PVC free	**Yes**

Use Longer

Lifetime extension

Repair	**No**

Use Again

Repack and remanufacture

Circularity Profile	**No need of specific recycling operations**
Take-back	**No**
WEEE Label	**The product must be disposed on European Union markets following specific waste collection and never end up in rubbish bins.**

Dimensions Drawings

Servo Motors Dimensions

Example with Straight Connectors

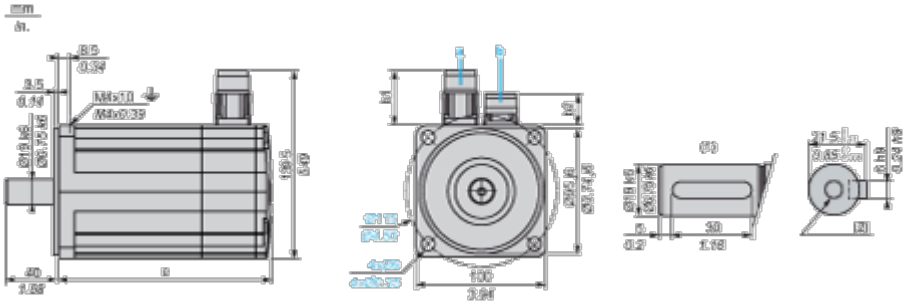

a: Power supply for servo motor brake

b: Power supply for servo motor encoder

(1) Shaft end, keyed slot (optional)

(2) For screw M6 x 21 mm/M6 x 0.83 in.

Dimensions in mm

Straight connectors		Rotatable angled connectors		c (without brake)	c (with brake)
b1	b2	b1	b2		
39.5	25.5	39.5	39.5	160	202

Dimensions in in.

Straight connectors		Rotatable angled connectors		c (without brake)	c (with brake)
b1	b2	b1	b2		
1.55	1.00	1.55	1.55	6.29	7.95

Performance Curves

400 V 3-Phase Supply Voltage

Torque/Speed Curves

Servo motor with LXM32•D18N4 servo drive

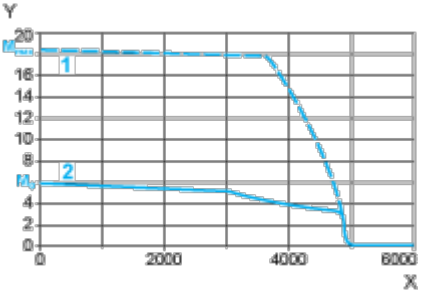

X Speed in rpm

Y Torque in Nm

1 Peak torque

2 Continuous torque

480 V 3-Phase Supply Voltage

Torque/Speed Curves

Servo motor with LXM32•D18N4 servo drive

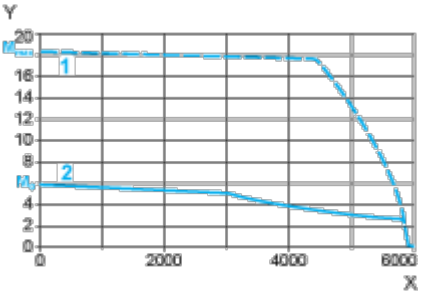

X Speed in rpm

Y Torque in Nm

1 Peak torque

2 Continuous torque