Product data sheet
Characteristics

BCH2HF0730CA5C
servo motor BCH, Lexium 28, 80mm, 750W, without oil seal, smooth, leads connection



Main

Range Compatibility	Lexium 28
Product or Component Type	Servo motor
Device short name	BCH2

Complementary

Maximum mechanical speed	5000 rpm
[Us] rated supply voltage	220 V 110 V
Phase	Three phase Single phase
Continuous stall current	4.01 A
Continuous stall torque	21.15 Lbf.In (2.39 N.m) LXM28... 4.5 A, 220 V, single phase 21.15 Lbf.In (2.39 N.m) LXM28... 4.5 A, 220 V, three phase 21.15 lbf.in (2.39 N.m) LXM28... 9 A, 110 V, single phase
Continuous power	750 W
Peak stall torque	63.37 Lbf.In (7.16 N.m) LXM28... 4.5 A, 220 V, single phase 63.37 Lbf.In (7.16 N.m) LXM28... 4.5 A, 220 V, three phase 63.37 lbf.in (7.16 N.m) LXM28... 9 A, 110 V, single phase
Nominal output power	750 W LXM28... 4.5 A, 220 V, single phase 750 W LXM28... 4.5 A, 220 V, three phase 750 W LXM28... 9 A, 110 V, single phase
Nominal torque	21.15 Lbf.In (2.39 N.m) LXM28... 4.5 A, 220 V, single phase 21.15 Lbf.In (2.39 N.m) LXM28... 4.5 A, 220 V, three phase 21.15 lbf.in (2.39 N.m) LXM28... 9 A, 110 V, single phase
Nominal speed	3000 rpm LXM28... 4.5 A, 220 V, single phase 3000 rpm LXM28... 4.5 A, 220 V, three phase 3000 rpm LXM28... 9 A, 110 V, single phase
Maximum current Irms	13.23 A LXM28... 0.75 kW, 220 V 13.23 A LXM28... 0.75 kW, 110 V
Maximum permanent current	4.29 A
Product compatibility	LXM28... servo drive 0.75 kW, 220 V, single phase LXM28... servo drive 0.75 kW, 220 V, three phase LXM28... servo drive 0.75 kW, 110 V, single phase
Shaft end	Smooth shaft
Shaft diameter	0.75 in (19 mm)
Shaft length	1.38 in (35 mm)
Feedback type	20 bits single turn absolute encoder
Holding brake	Without
Mounting Support	Asian standard flange
Motor flange size	3.15 in (80 mm)
Electrical connection	Free lead
Torque constant	0.6 N.m/A 68 °F (20 °C)
Back emf constant	36 V/krpm 68 °F (20 °C)

The information provided in this documentation contains general descriptions and/or technical characteristics of the performance of the products contained herein.
This documentation is not intended as a substitute for and is not to be used for determining suitability or reliability of these products for specific user applications.
It is the duty of any such user or integrator to perform the appropriate and complete risk analysis, evaluation and testing of the products with respect to the relevant specific application or use thereof.
Neither Schneider Electric Industries SAS nor any of its affiliates or subsidiaries shall be responsible or liable for misuse of the information contained herein.

Rotor inertia	1.54 kg.cm²
Stator resistance	1.5 Ohm 68 °F (20 °C)
Stator inductance	6.1 mH 68 °F (20 °C)
Stator electrical time constant	4.07 ms 68 °F (20 °C)
Maximum radial force Fr	332 N 3000 rpm
Maximum axial force Fa	115 N
Brake pull-in power	10.2 W
Type of cooling	Natural convection
Length	5.43 in (138 mm)
Number of motor stacks	2
Centring collar diameter	2.76 in (70 mm)
Centring collar depth	0.16 in (4 mm)
Number of mounting holes	4
Mounting holes diameter	0.26 in (6.6 mm)
Circle diameter of the mounting holes	3.54 in (90 mm)
Distance shaft shoulder-flange	0.16 in (4 mm)
Net Weight	6.39 lb(US) (2.9 kg)

Environment

IP Degree of Protection	IP54 IM B5, IM V1 IP50 IM V3
Ambient Air Temperature for Operation	-4…104 °F (-20…40 °C)

Ordering and shipping details

Category	18281-LEXIUM 23/28 MOTORS
Discount Schedule	PC53
GTIN	3606480733727
Returnability	No
Country of origin	CN

Packing Units

Unit Type of Package 1	PCE
Number of Units in Package 1	1
Package 1 Height	5.43 in (13.8 cm)
Package 1 Width	6.89 in (17.5 cm)
Package 1 Length	11.65 in (29.6 cm)
Package 1 Weight	7.67 lb(US) (3.48 kg)
Unit Type of Package 2	S03
Number of Units in Package 2	2
Package 2 Height	11.81 in (30.0 cm)
Package 2 Width	11.81 in (30.0 cm)
Package 2 Length	15.75 in (40.0 cm)
Package 2 Weight	16.62 lb(US) (7.54 kg)

Offer Sustainability

Sustainable offer status	Green Premium product
California proposition 65	WARNING: This product can expose you to chemicals including: Lead and lead compounds, which is known to the State of California to cause cancer and birth defects or other reproductive harm. For more information go to www.P65Warnings.ca.gov
REACh Regulation	REACh Declaration
REACh free of SVHC	Yes
EU RoHS Directive	Pro-active compliance (Product out of EU RoHS legal scope) EU RoHS Declaration
Mercury free	Yes

China RoHS Regulation	China RoHS Declaration
RoHS exemption information	Yes
Environmental Disclosure	Product Environmental Profile
Circularity Profile	End Of Life Information
WEEE	The product must be disposed on European Union markets following specific waste collection and never end up in rubbish bins.
PVC free	Yes

BCH2HF0730CA5C

Dimensions

Dimensions of Motor

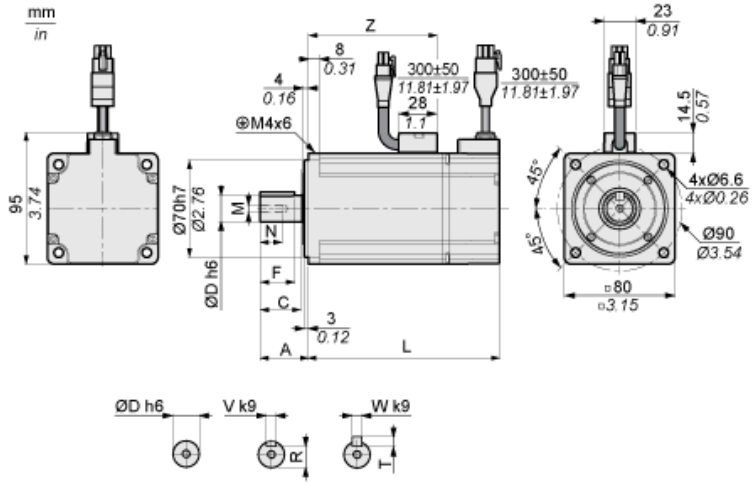

	mm	in.
L (without holding brake)	138	5.43
L (with holding brake)	178	7.01
A	35	1.38
C	29.5	1.16
D	19	0.75
F	25	0.98
R	15.5	0.61
T	6	0.24
V	6	0.24
W	6	0.24
Z	93	3.66

Torque/Speed Curves with 230 V Single/Three Phase Supply Voltage

Servo Motor with LXM28AU04●●● Servo Drive

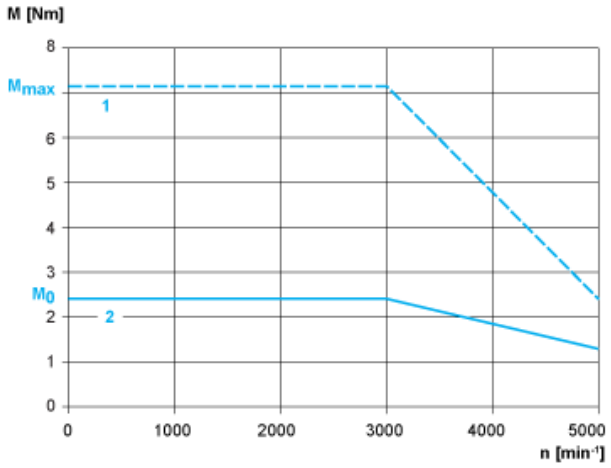

1 : Peak torque
2 : Continuous torque