Spacial S3D

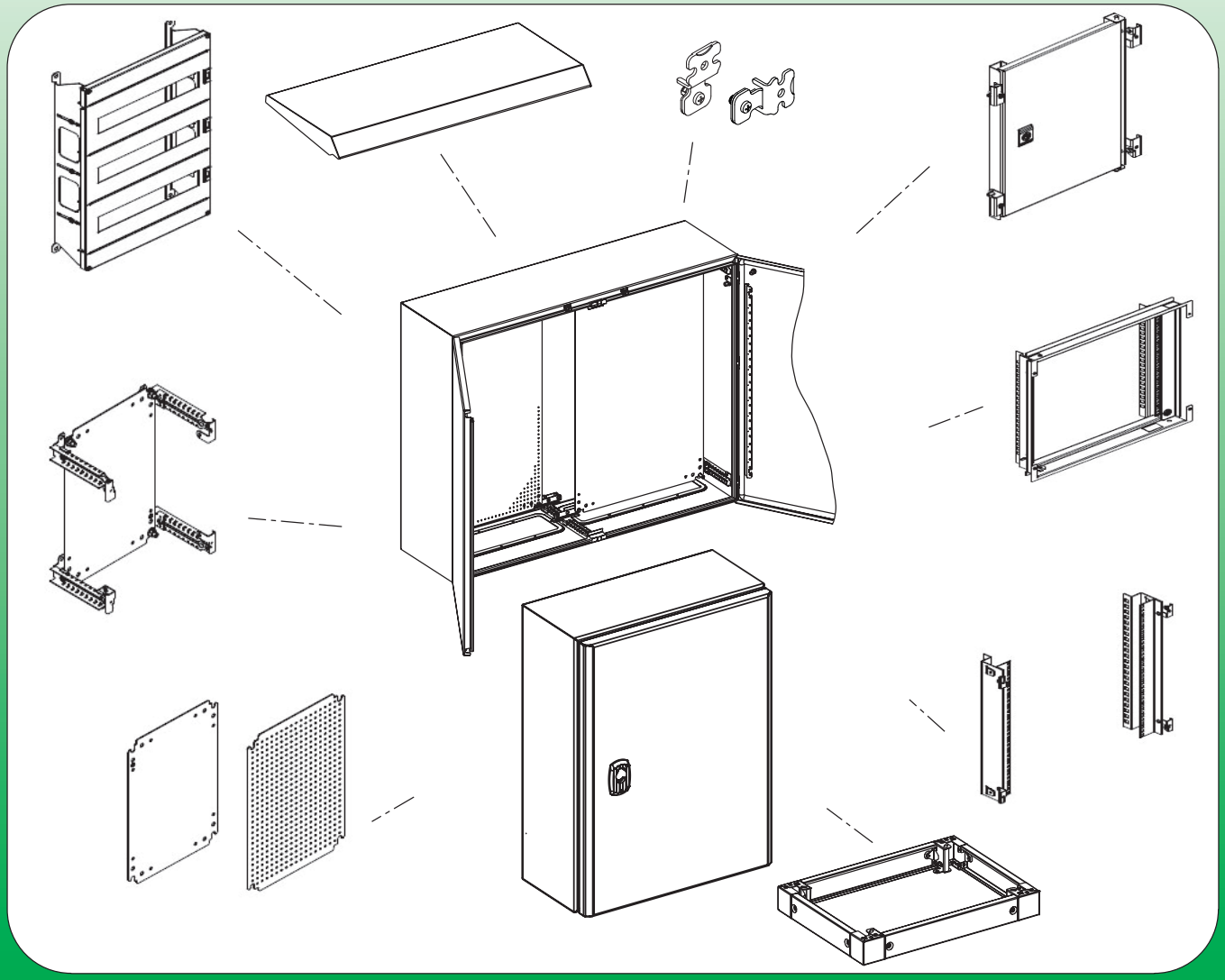

Notice de montage
Montageanleitung
Assembly instructions
Montage-instructie
Instrucciones de montaje
Istruzioni di montaggio

Coffrets
Gehäuse
Enclosure
Kasten
Cajas
Custodie

Schneider Electric

Released for Manufacturing
Printed on 2018/11/14

140x80	245x80	245x130	345x130	445x130	545x130	495x220	HM8	L8x20	HM6	DD6			Ø 10,3		
1							4	4	2	2	4	2	4	1	1
	1						4	4	2	2	4	2	4	1	1
		1					4	4	2	2	6	2	4	1	1
			1				4	4	2	2	8	2	4	1	1
			2				4	4	2	2	16	2	4	1	1
				1			4	4	2	2	8	2	4	1	1
				2			6	6	4	4	16	4	4	1	1
					1		4	4	2	2	10	2	4	1	1
						1	4	4	2	2	12	2	4	1	1

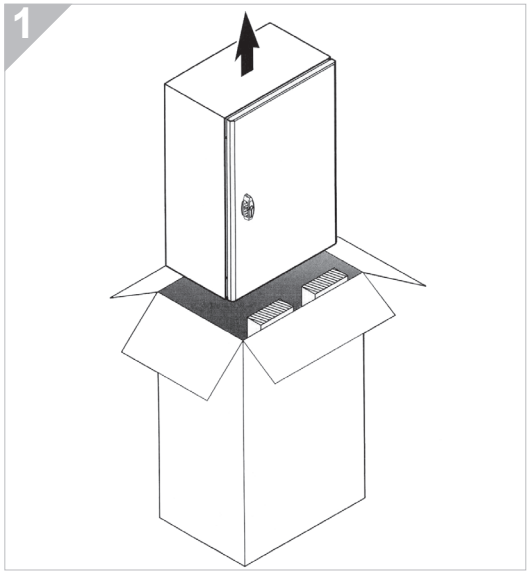

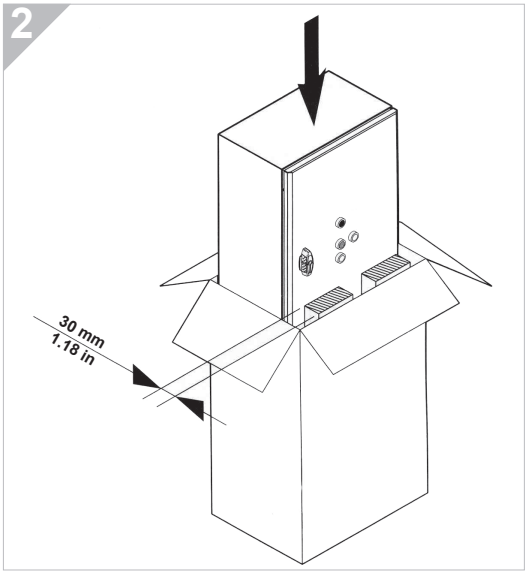

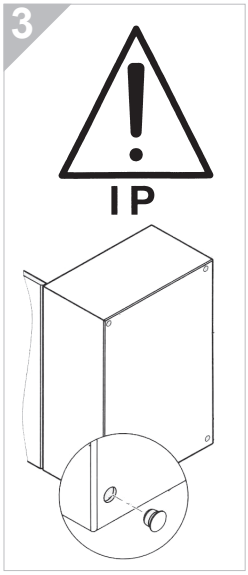

POUR REPONDRE A VOS ATTENTES EN CAS DE RECLAMATION ET OPTIMISER LE TRAITEMENT DE VOTRE DOSSIER, VEUILLEZ NOUS FOURNIR LES INFORMATIONS FIGURANT SUR L'ETIQUETTE DE TRACABILITE COLLEE A L'INTERIEUR DE VOS PRODUITS.

UM IHREN ERWARTUNGEN ENTGEGENZUKOMMEN IM FALLE EINER BEANSTANDUNG UND DIE BEHANDLUNG IHRER AKTE ZU OPTIMISIEREN, BITTEN WIR UM ANGABE DER INFORMATIONEN AUF DER ATIKTTE IM INNERN DES PRODUKTES.

IN ORDER TO MANAGE PROPERLY YOUR QUALITY CLAIM, COULD YOU PLEASE PROVIDE US ALL THE INFORMATIONS MENTIONNED ON THE TRACER LABEL LOCATED INSIDE THE BODY OF THE PRODUCT.

PER UNA RIPOSTA OTTIMA AD UNA RECLAMAZIONE, VI PREGHIAMO DI SEMPRE INDICARCI LE INFORMAZIONI SCRITTE SULL'ETICHETTA DI TRACIABILITA CHE SI TROVA ALL'INTERNO DEL PRODOTTO.

PARA CONTESTAR A SUS EXPEXTATIVAS EN CASO DE RECLAMACION Y OPTIMIZAR EL TRATAMIENTO DE SU DOSSIER, LE RUEGO NOS FACILITE LAS INFORMACIONES QUE FIGURAN EN LA ETIQUETA DE TRAZABILIDAD PEGADA EN EL INTERIOR DEL PRODUCTO.

Released for Manufacturing
Printed on 2018/11/14

A

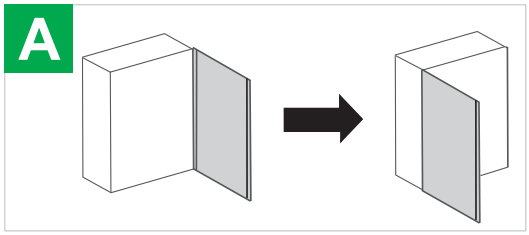

A1

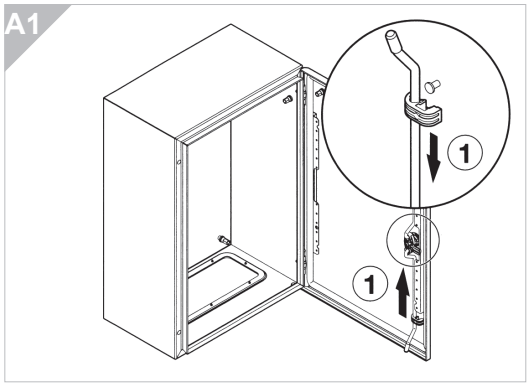

A2

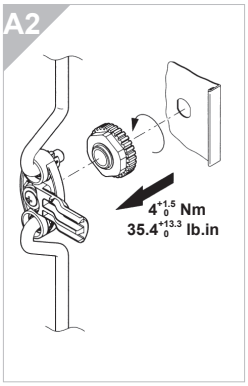

A3

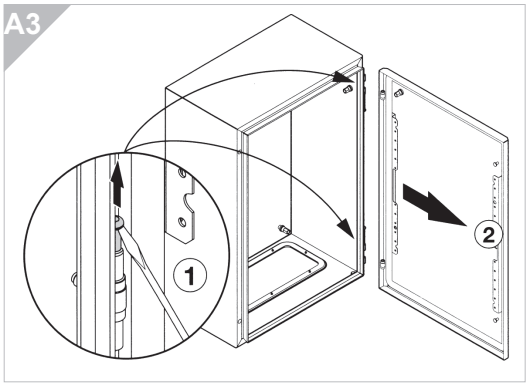

A4

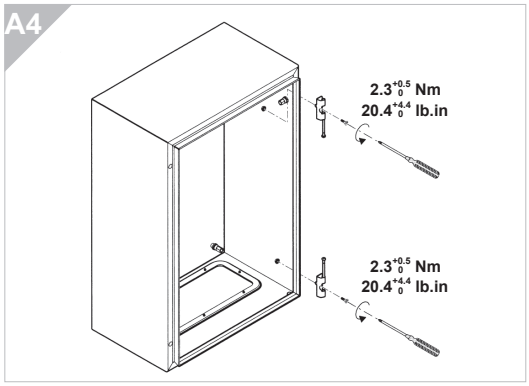

A5

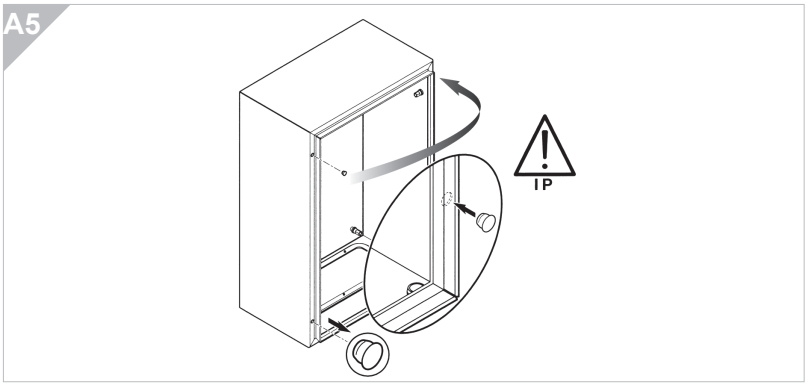

A6

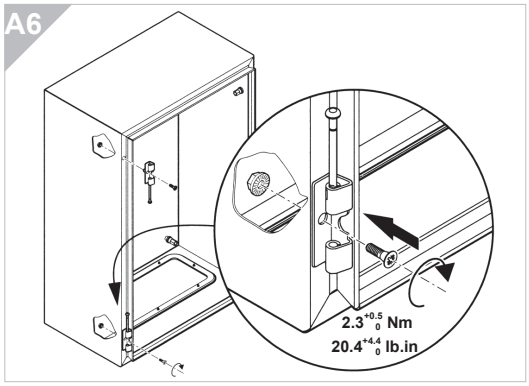

A7

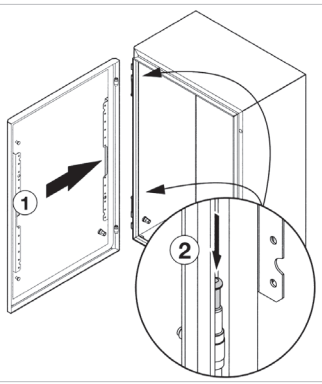

A8

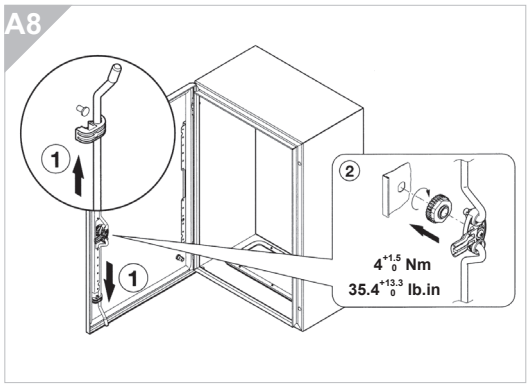

Released for Manufacturing
Printed on 2018/11/14

B

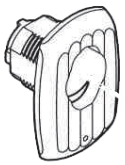

B1

$4^{+1.5}_{0}$ Nm
$35.4^{+13.3}_{0}$ lb.in

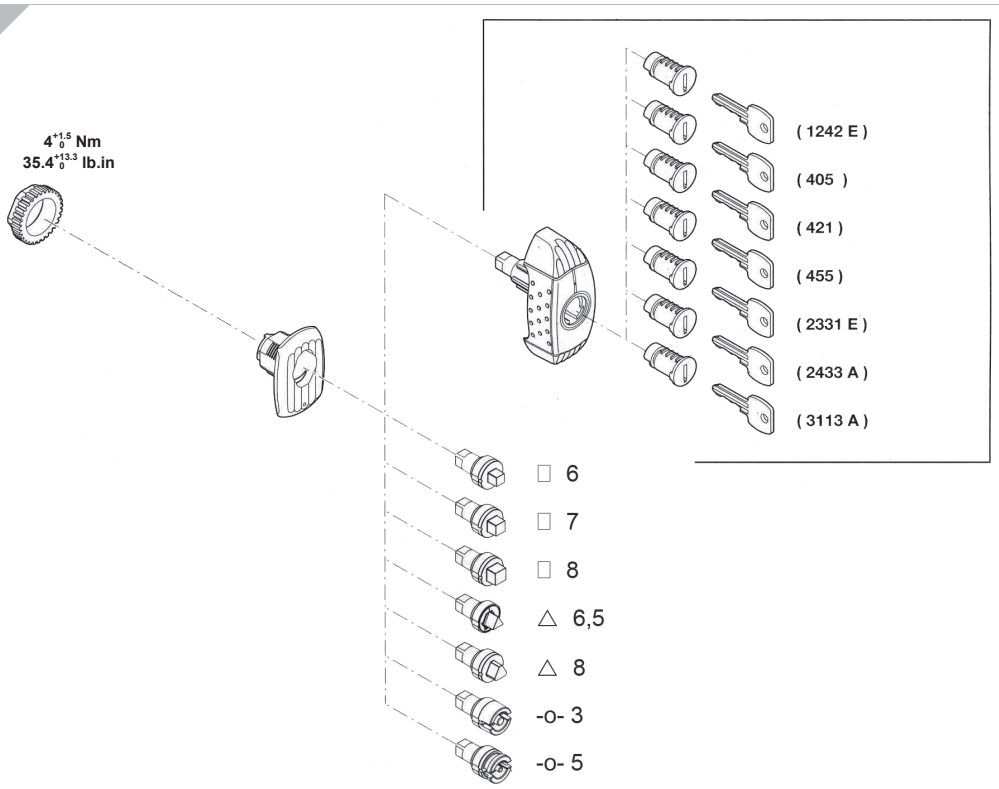

B3

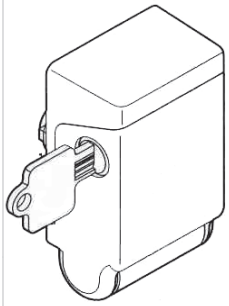

B2

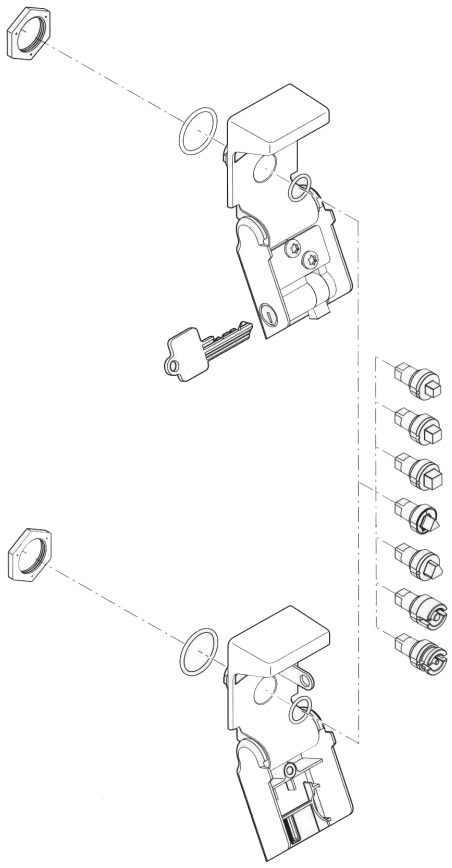

B4

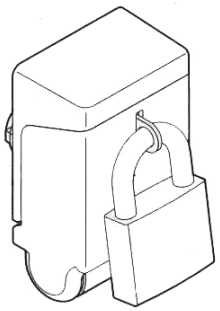

Released for Manufacturing
Printed on 2018/11/14

B5

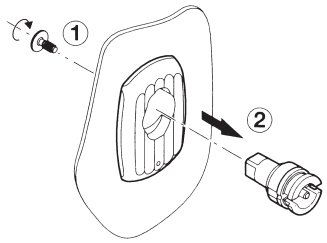

B5.1

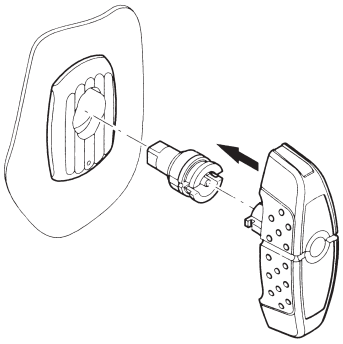

B5.2

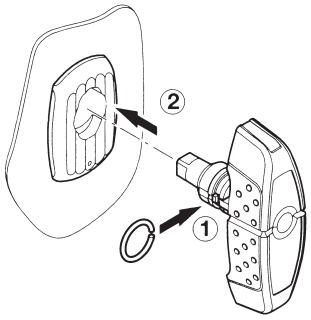

B5.3

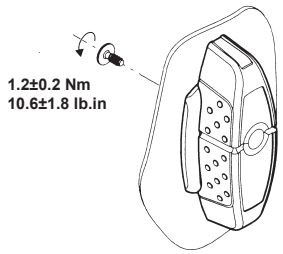

C

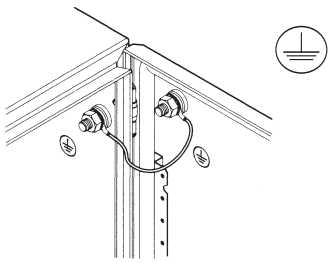

C1

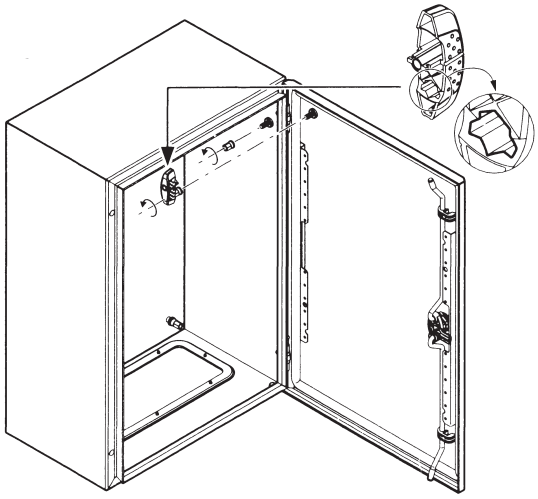

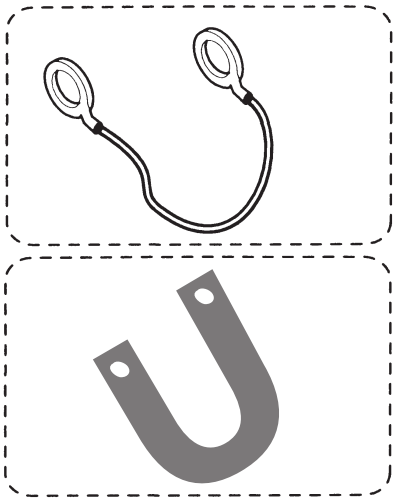

C2

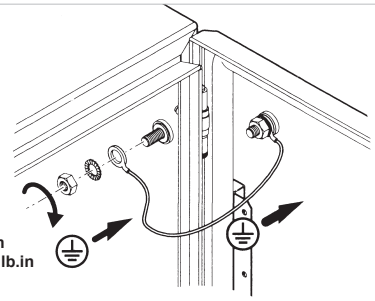

C3

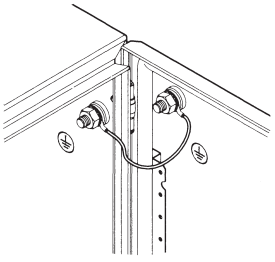

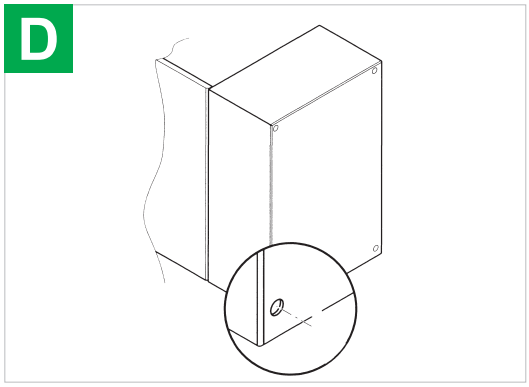

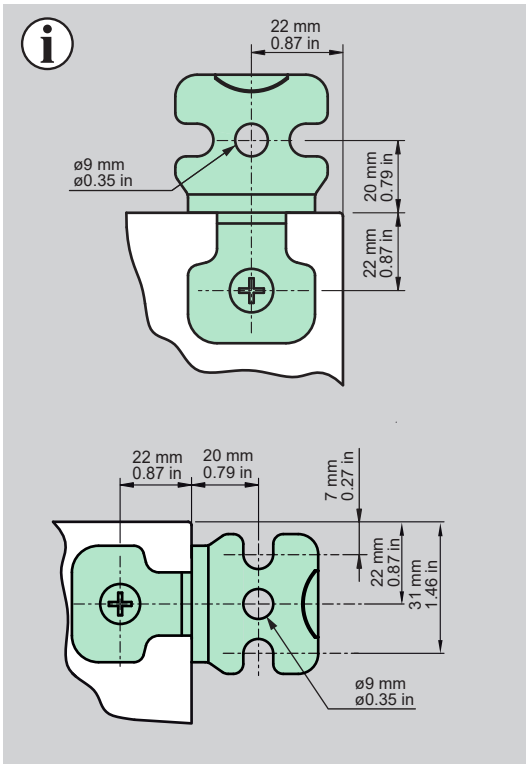

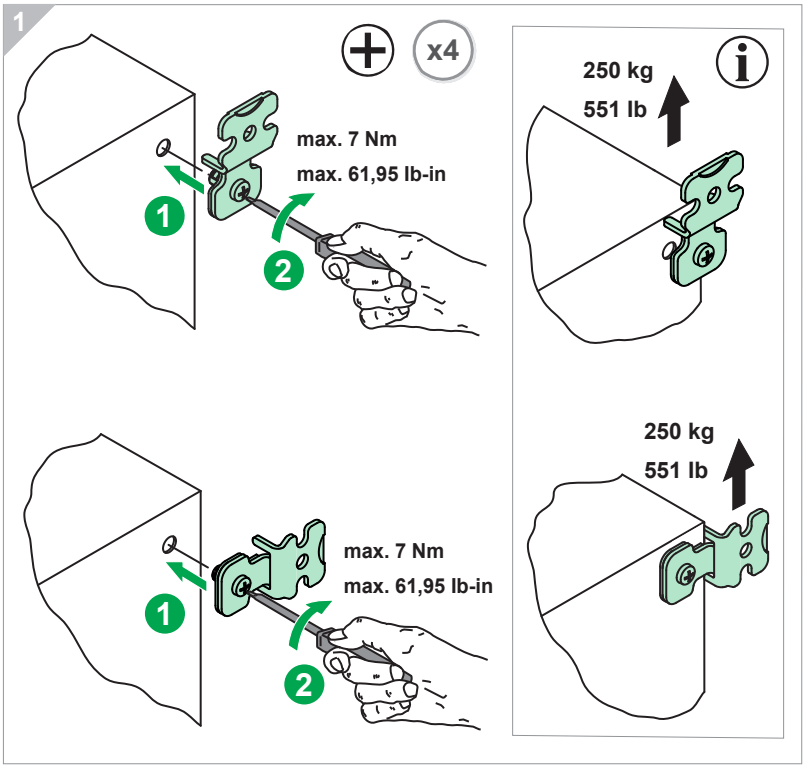

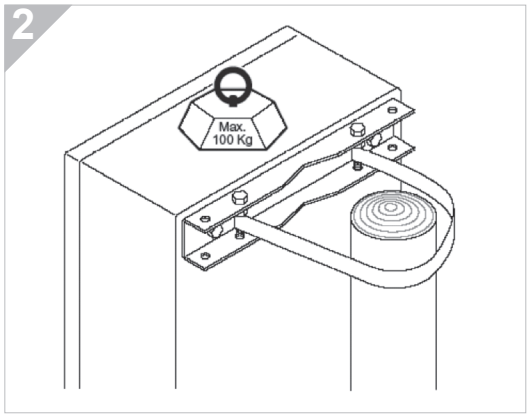

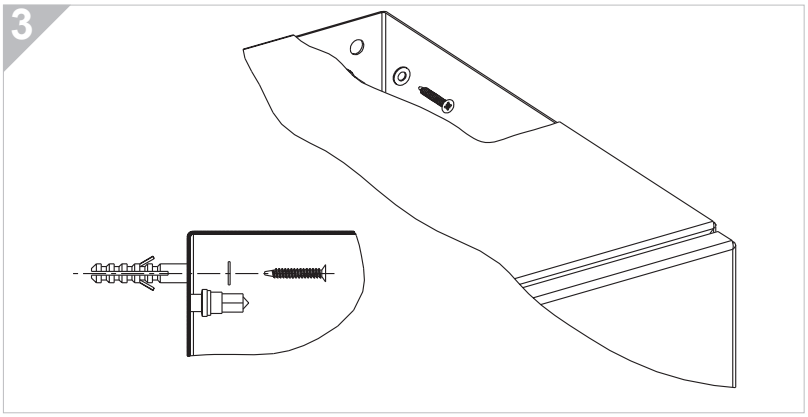

c UL US LISTED

To maintain the same UL type rating, all conduit fittings and other components installed in openings made in the enclosure must have its same ratings and only wall fixing bracket NSYPFCR may be used. When installed as a Type 2 or 3R enclosure, drill a drain hole (3.2 - 6.4 mm (1/8 - ¼ in) diameter) in the lowest part of the bottom wall.

It is the customer responsibility to fulfill requirements of section 19 (Openings) of UL508A Standard and Section 9.6 (Equipment openings)of UL50E Standard.
Il est de la responsabilité du client de respeter les exigences de la section 19 (Openings) de la Norme UL508A et la section 9.6 (Equipment openings) de la norme UL50E

Released for Manufacturing
Printed on 2018/11/14

E

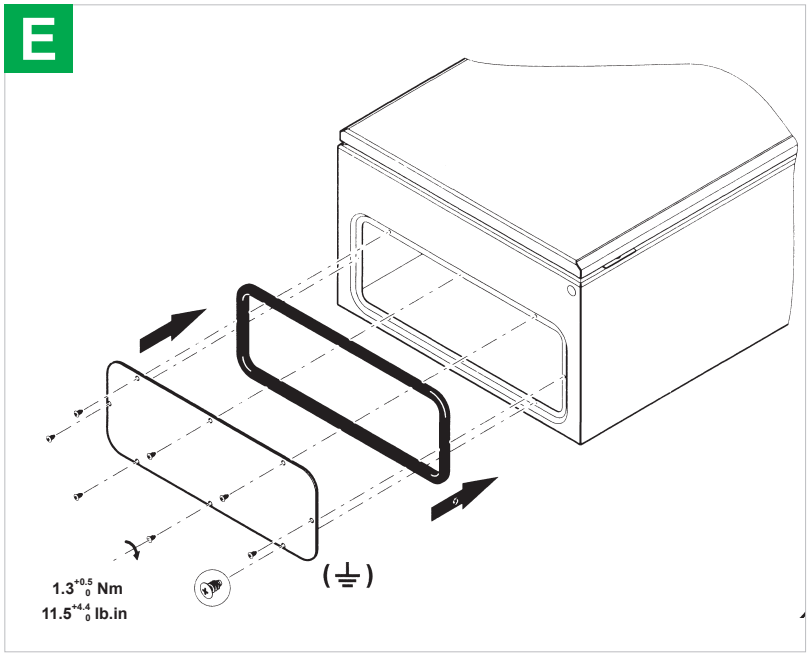

F1

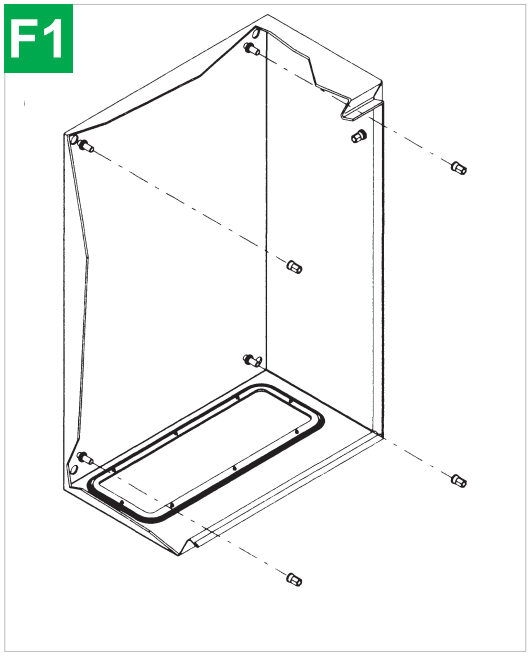

F2

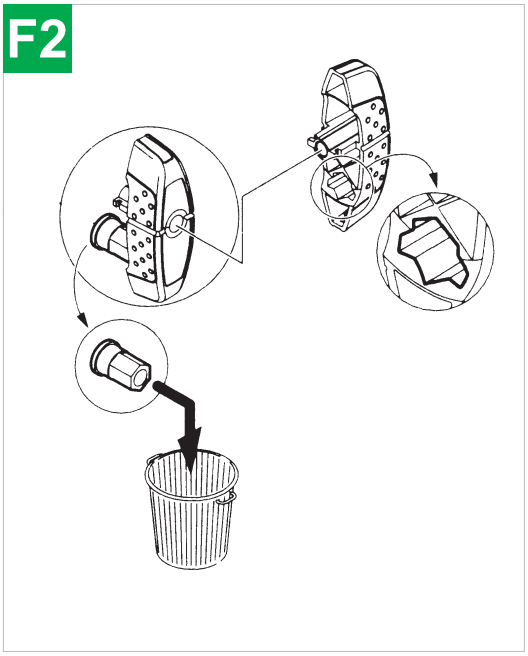

F3

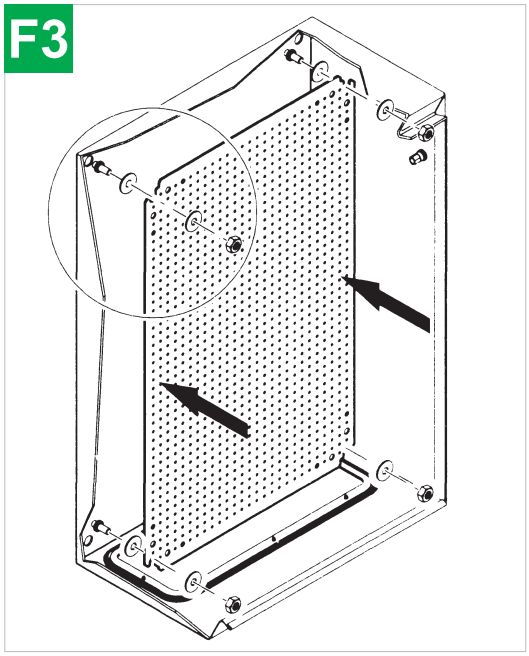

F4

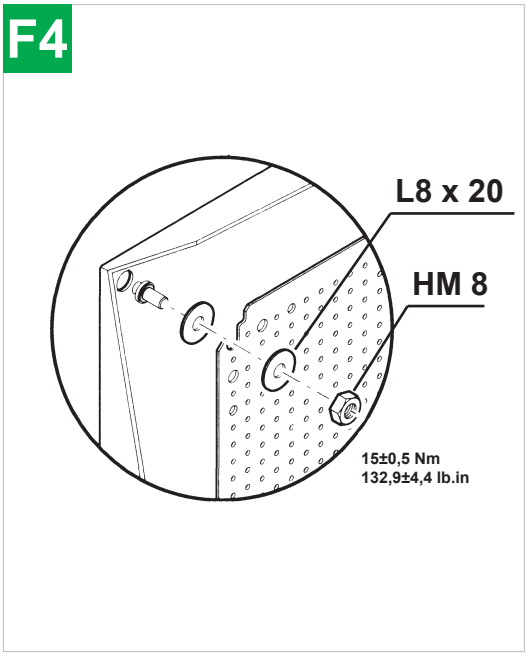

Released for Manufacturing
Printed on 2018/11/14

G

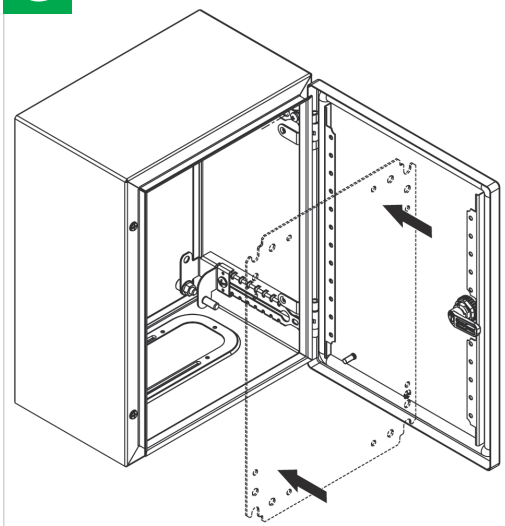

H

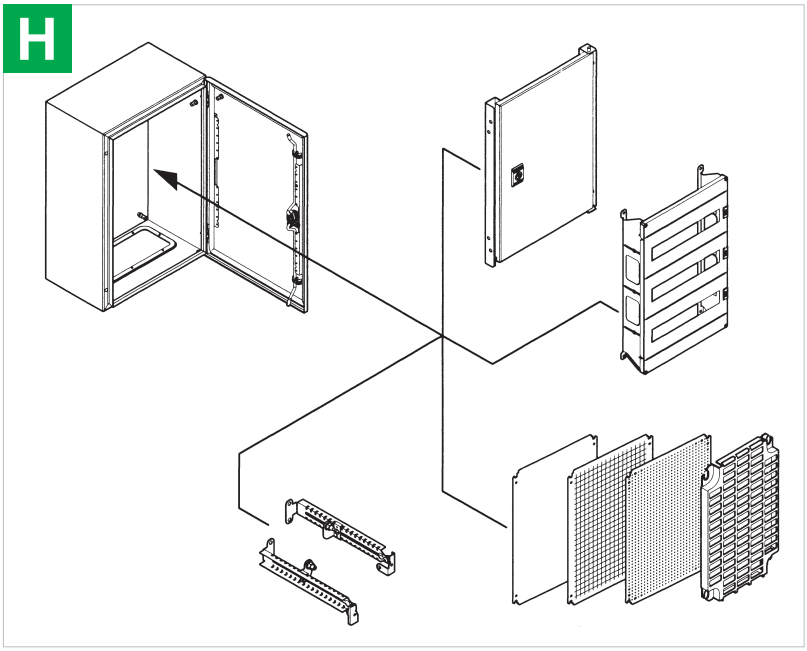

I

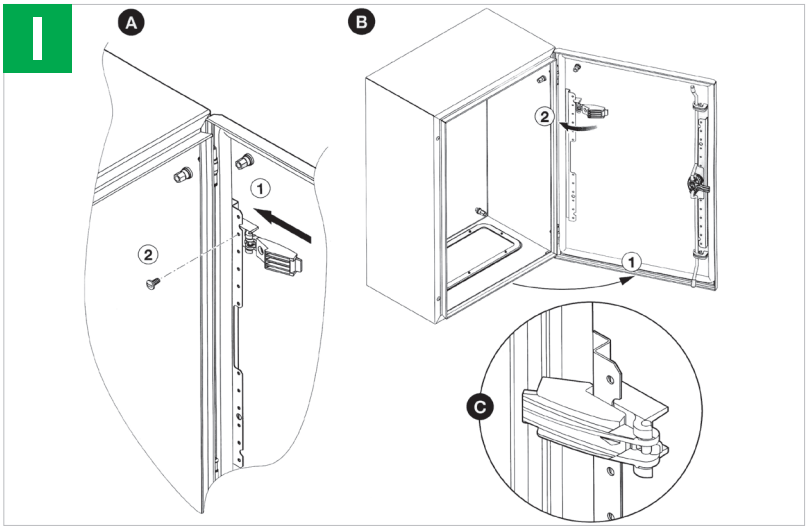

J

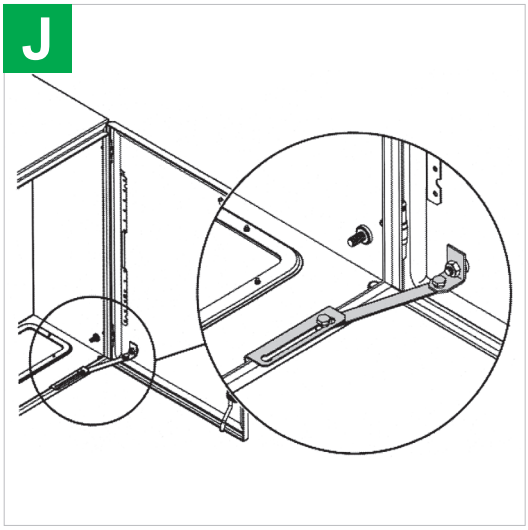

K



L

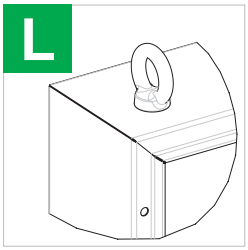

M

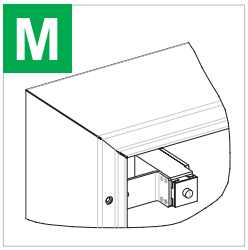

Schneider Electric Industries SAS
89, boulevard Franklin Roosevelt
F - 92500 Rueil-Malmaison (France)
Tel : + 33 (0) 1 41 29 85 00
Fax : + 33 (0) 1 41 29 89 01
http://www.schneider-electric.com

En raison de l'évolution des normes et du matériel, les caractéristiques indiquées par les textes et les images de ce document ne nous engagent qu'après confirmation par nos services.
As standards, specifications and designs change from time to time, please ask for confirmation of the information given in the publication.

Ce document a été imprimé sur du papier écologique.
This document has been printed on ecological paper.

ENNA07900T-05

Released for Manufacturing
Printed on 2018/11/14