Product data sheet

Specifications



Discontinued - Service only

Motion control modules, Modicon Premium, 7.2 to 11.5W, 8ms to 10ms, for servomotors, limited axis

TSXCAY21

Discontinued on: Dec 2, 2020

To be end-of-service on: Dec 31, 2026

Product availability: Non-Stock - Not normally stocked in distribution facility

Main

Range of Product	Modicon Premium Automation platform
Product or Component Type	Motion control modules
Product Specific Application	For servo motors
Servo loop type	Proportional to overshoot compensation and gain switching 2 ms
Checks	Presence of voltage/sensor feedback counter input Consistency of commands Encoder coupling, servo drive present, emergency stop Proper execution of movement Sensor power supply Validity of parameters

Complementary

Speed profile path	Trapezoidal or parabolic
Resolution	<= 1000 position units per point >= 0.5 position units per point
Length of axis	32000…32000000 P
Acquisition speed	>= 54000 points/mn <= 270000 points/mn
Acceleration time	8 ms...10 s
Operating Mode	Manual OFF Automatic FOLLOWER Direct drive mode
Type of axis	Following axis static ratio Limited axis
I/O modularity	2 axes
Input compatibility	Absolute encoder SSI output 16...25 bits Incremental encoder 10...30 V totem pole Incremental encoder 5 V DC RS422 With 2-wire/3-wire sensor (24 DC) auxiliary input Absolute encoder parallel output ABE7CPA11
Clock frequency	200 kHz SSI absolute encoder
Incremental encoder frequency x1	500 kHz
Incremental encoder frequency x 4	1000 kHz in counting 250 kHz in input
Power dissipation in W	7.2…11.5 W

Price is “List Price” and may be subject to a trade discount – check with your local distributor or retailer for actual price.

Disclaimer: This documentation is not intended as a substitute for and is not to be used for determining suitability or reliability of these products for specific user applications

Input type	Current sink auxiliary input EN/IEC 1131 Type 2 Resistive servo drive control input EN/IEC 1131 Type 1 Resistive counter input
Input logic	Positive
Input voltage	24 V 8 mA auxiliary input 24 V 8 mA servo drive control input 5 V 18 mA counter input
Input voltage limits	<= 5.5 V counter input 19...30 V auxiliary input 19...30 V servo drive control input
Voltage state 1 guaranteed	>= 11 V auxiliary input >= 11 V servo drive control input >= 2.4 V counter input
Current state 1 guaranteed	>= 3.5 mA servo drive control input) >= 3.7 mA counter input) >= 6 mA auxiliary input)
Voltage state 0 guaranteed	<= 1.2 V counter input <= 5 V auxiliary input <= 5 V servo drive control input
Current state 0 guaranteed	<= 1 mA counter input) <= 1.5 mA servo drive control input) <= 2 mA auxiliary input)
Input impedance	270 Ohm counter input 3000 Ohm auxiliary input 3000 Ohm servo drive control input
Number of outputs	2 reflex output static EN/IEC 61131 2 analogue output static 2 servo drive validation output relay
Analogue output range	+/- 10...24 V
Analogue output resolution	13 bits + sign
LSB value	1.25 mV analogue output
Output voltage	24 V DC reflex output: 24 V DC servo drive validation output:
Output voltage limits	Reflex output 19...30 V Servo drive validation output 5...30 V
Nominal output current	0.5 A reflex output
Maximum output current	1.5 mA analogue output 200 mA servo drive validation output 625 mA reflex output
Minimum load	1 mA 1 V
Maximum voltage drop	<1 V at state on reflex output
Maximum leakage current	0.3 mA reflex output
Switching time	< 5 ms for servo drive validation < 500 µs for reflex output
Output compatibility	Positive logic DC inputs (resistance <= 15 kOhm) reflex
Short-circuit protection	Current limiter reflex output Thermal tripping reflex output
Output overload protection	Current limiter reflex output Thermal tripping reflex output
Output overvoltage protection	Zener diode between outputs and 24 DC reflex output
Reverse polarity protection	Reflex output reverse diode on supply

Local signalling	1 LED (green) for module operating (RUN) 1 LED (red) for external fault (I/O) 1 LED (red) for internal fault, module failure (ERR) 2 LEDs (green) for axis diagnostics available
Electrical connection	1 connector HE-10 20 pins for aux inputs, reflex output, for external sensor and preactuator power supply 1 connector HE-10 20 pins for servo drive ctrl inputs + for ext power supply of servo drive inputs/outputs 1 connector SUB-D 9 for an analogue output (speed reference) 2 connectors SUB-D 15 for an incremental or absolute encoder
Current consumption	11...20 mA 24 V DC on 10/30 V absolute encoder module 1100 mA 5 V DC 15 mA 24 V DC
Module format	Standard
Product Weight	1.06 lb(US) (0.48 kg)

Environment

Protective treatment	TC
Ambient Air Temperature for Operation	32…140 °F (0…60 °C)
Ambient Air Temperature for Storage	-13…158 °F (-25…70 °C)
Relative Humidity	5…95 % without condensation
Operating altitude	<= 6561.68 ft (2000 m)

Ordering and shipping details

Category	US1PC2222558
Discount Schedule	PC22
GTIN	3389110725377
Returnability	No

Packing Units

Unit Type of Package 1	PCE
Nbr. of units in pkg.	1
Package 1 Height	2.2 in (5.5 cm)
Package 1 Width	7.0 in (17.7 cm)
Package 1 Length	10.2 in (26.0 cm)
Package weight(Lbs)	21.5 oz (610.0 g)

Contractual warranty

Warranty (in months)	18

Environmental Data

Schneider Electric aims to achieve Net Zero status by 2050 through supply chain partnerships, lower impact materials, and circularity via our ongoing “Use Better, Use Longer, Use Again” campaign to extend product lifetimes and recyclability.

Environmental Data explained >

How we assess product sustainability >

Use Better

Materials and Substances

California proposition 65	**WARNING: This product can expose you to chemicals including: Lead and lead compounds which is known to the State of California to cause cancer and birth defects or other reproductive harm. For more information go to www.P65Warnings.ca.gov**

Use Longer

Lifetime extension

Repair	**No**

Dimensions Drawings

Standard and Extendable Racks for Modules Mounting

Dimensions of Modules and Racks

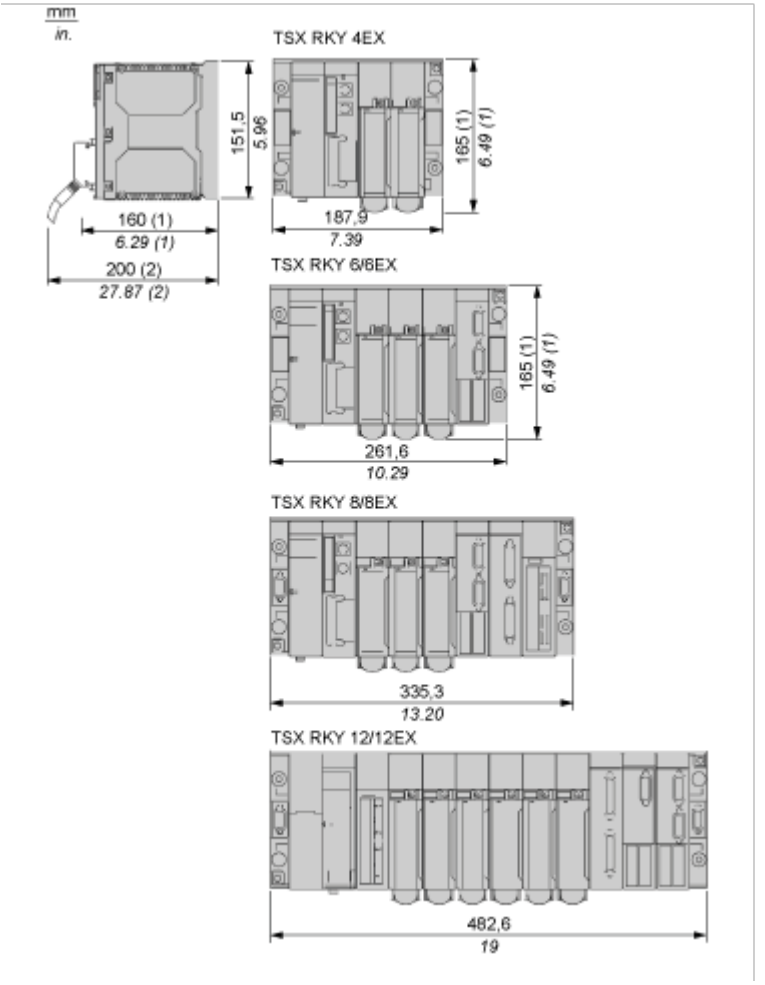

(**1**) With screw terminal block modules.
(**2**) Maximum depth for all types of modules and their associated connectors.

Connections and Schema

Connection of Speed Reference Signals

Connector Pinout

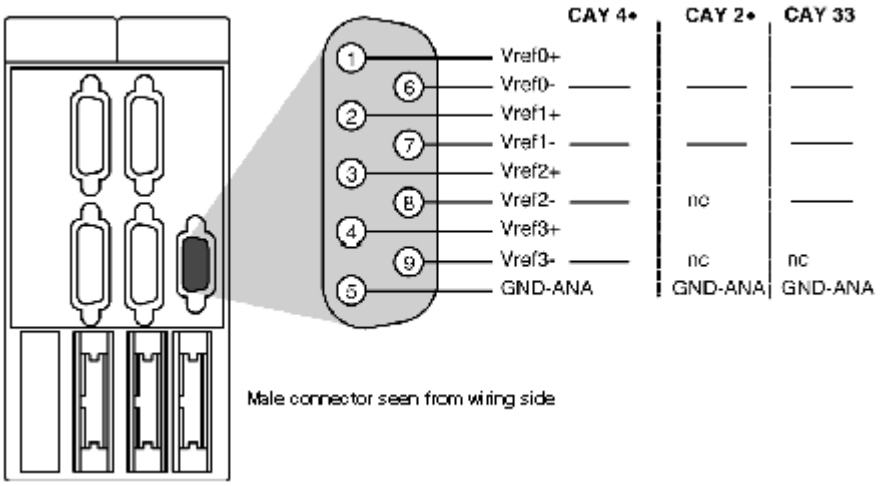

Connection of Counting Signals

Connectors Pinouts

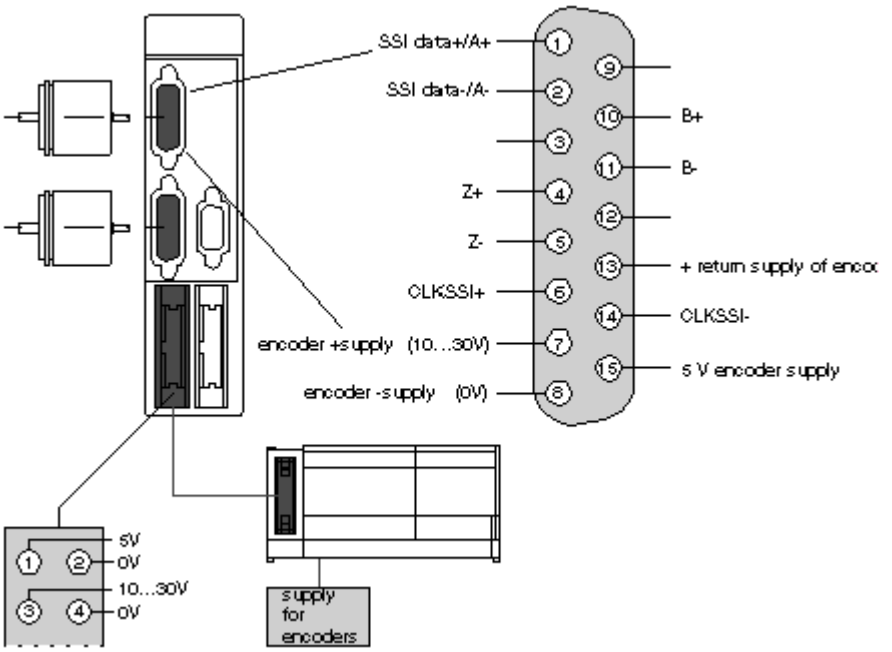

Element	Designation	Terminal
Incremental encoder	input A+	1
	input A-	2
	input Z+	4
	input Z-	5
	input B+	10
	input B-	11
	return supply of encoder	13
Absolute SSI encoder:	+ SSI Data	1
	- SSI data	2
	CLKSSI+	6
	CLKSSI-	14
5 V encoder power supply	+supply (5 V)	15
	- supply (0 V)	8
Encoder power supply (10-30 V)	+supply (10-30 V)	7
	- supply (0 V)	8

Connection of Sensors/Pre-actuators and Encoder Power Supply, without Variable Speed Controller

HE10 Connector Pinout

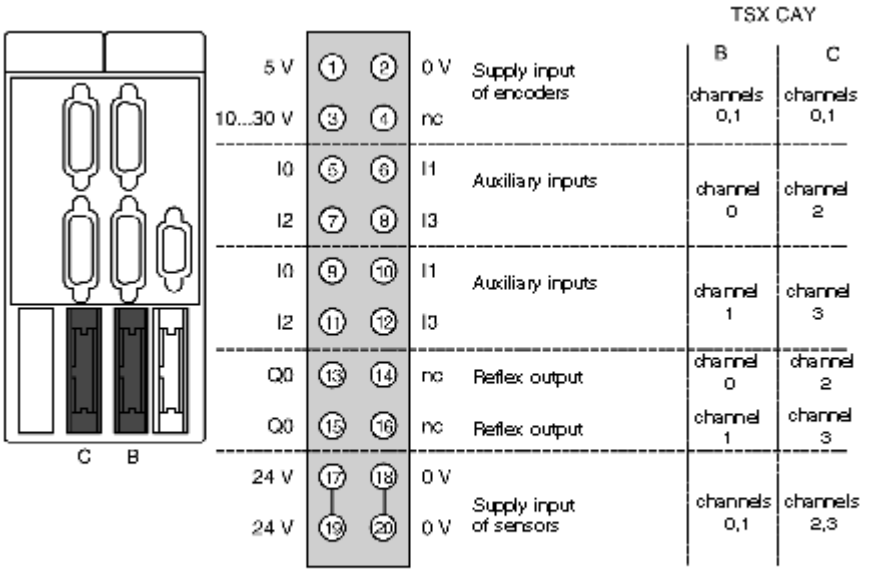

TSX CAY 2• module: Channels 0 and 1
TSX CAY 4• module: Channels 0,1,2 and 3
TSX CAY 33• module: Channels 0,1 and 2

The auxiliary inputs/outputs are allocated the following functions:

- I0 = cam reference point input,
- I1 =emergency stop input (stop if there is no current in the input),
- I2 = adjusting input,
- I3 = adjustment input,
- Q0 = reflex output (static output),
- 0 V = shared auxiliary inputs and reflex outputs.

Connection of the Variable Speed Controller Signals

Connector Pinout

The axis command modules implement basic management of the signals necessary for correct operation of the variable speed controllers. There is only one connector, regardless of the number of axis command module channels.

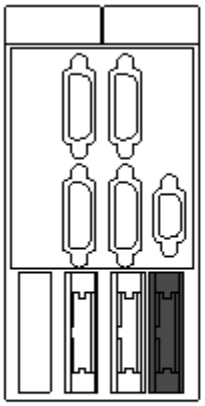

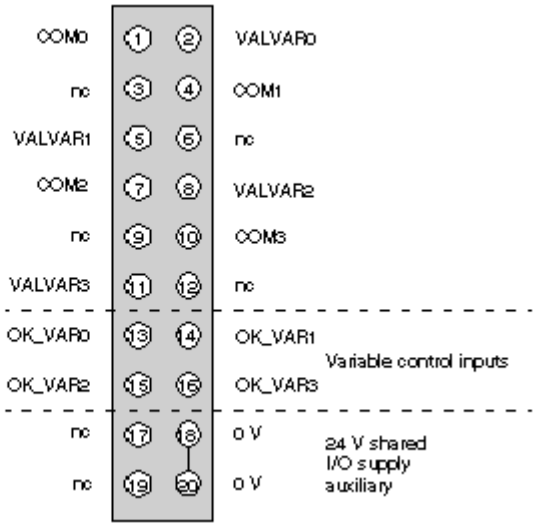

COMx – VALVARx: potential free contact to validate variable speed controller
OK_VARx: variable speed controller input check
24 V – 0 V sensor power supply

NOTE: Each channel uses a potential free closing contact.