Product data sheet

Specifications



Socket-outlet, X Series, 30A, standard, for dryer, commercial, black, matte finish

SQR46301BK

Product availability: Stock - Normally stocked in distribution facility

Main

Range	Square D X Series
Product or Component Type	Socket-outlet
Aesthetic name	X Series
Device Application	Power supply
Product destination	Dryer
Device presentation	Mechanism with fixing frame
Body type	Standard
Socket number	1
Outlet poles configuration	3P + E
Outlet standard	NEMA

Complementary

Device mounting	Flush
Mounting Mode	By screws
[Ie] rated operational current AC	30 A
[Ue] rated operational voltage	125 V 250 V
Network type	AC
Network Frequency	60 Hz
Number of gangs	1 gang 2 gangs
Number of modules	1
Color	Black
surface treatment	Painted
Surface Finish	Matte
Material	Plastic: strap Metal: fixing frame
Connections - terminals	Phase and neutral 3 screw terminal Earth 1 screw terminal
Width	2.5 in (64 mm)
Height	3.7 in (95 mm)
Depth	2.2 in (57 mm)
Quantity per Set	1 piece

Price is “List Price” and may be subject to a trade discount – check with your local distributor or retailer for actual price.

Disclaimer: This documentation is not intended as a substitute for and is not to be used for determining suitability or reliability of these products for specific user applications

Environment

Product Certifications	cULus
Standards	UL 498 NEMA 14-30R

Ordering and shipping details

Category	US10DE909932
Discount Schedule	0DE9
GTIN	785901544449
Returnability	Yes
Country of origin	CN

Packing Units

Unit Type of Package 1	PCE
Nbr. of units in pkg.	1
Package 1 Height	4.2 in (10.6 cm)
Package 1 Width	2.4 in (6.2 cm)
Package 1 Length	2.6 in (6.5 cm)
Package weight(Lbs)	7.4 oz (210 g)
Unit Type of Package 2	BB1
Number of Units in Package 2	10
Package 2 Height	4.4 in (11.3 cm)
Package 2 Width	5.4 in (13.7 cm)
Package 2 Length	12.6 in (32.0 cm)
Package 2 Weight	4.052 lb(US) (1.838 kg)
Unit Type of Package 3	CAR
Number of Units in Package 3	40
Package 3 Height	13.4 in (34.0 cm)
Package 3 Width	9.4 in (24.0 cm)
Package 3 Length	11.7 in (29.6 cm)
Package 3 Weight	17.53 lb(US) (7.95 kg)

Contractual warranty

Warranty (in months)	24

Environmental Data

Schneider Electric aims to achieve Net Zero status by 2050 through supply chain partnerships, lower impact materials, and circularity via our ongoing “Use Better, Use Longer, Use Again” campaign to extend product lifetimes and recyclability.

Environmental Data explained >

How we assess product sustainability >

Use Better

Materials and Substances

Packaging made with recycled cardboard	**Yes**
Packaging without single use plastic	**Yes**
EU RoHS Directive	**Compliant**
REACh Regulation	**Free of Substances of Very High Concern above the threshold**
California proposition 65	**WARNING: Cancer and Reproductive Harm - www.P65Warnings.ca.gov**

Use Longer

Lifetime extension

Repair	**No**

Use Again

Repack and remanufacture

Circularity Profile	**No need of specific recycling operations**
Take-back	**No**

Technical Illustration

Dimensions

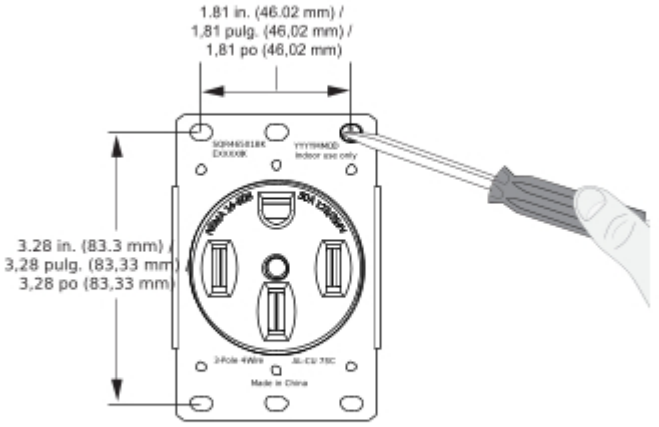

Technical Illustration

Wiring diagram

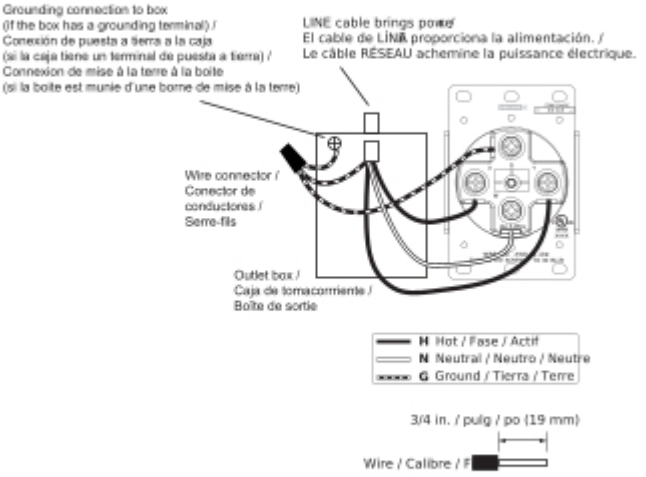

Image of product / Alternate images

Alternative













