Product data sheet

Specifications



Discontinued - Service only

Counter modules, Modicon Premium, 4 channels modularity, current limiter protection, 8 to 11.5W, 40kHz

TSXCTY4A

Discontinued on: Dec 2, 2020

To be end-of-service on: Dec 31, 2026

Product availability: Non-Stock - Not normally stocked in distribution facility

Main

Range of Product	Modicon Premium Automation platform
Product or Component Type	Counter modules
I/O modularity	4 channels
Electrical circuit type	Auxiliary output EN/IEC 61131

Complementary

Counting frequency	40 kHz
Power dissipation in W	8…11.5 W
Cycle time	10 ms
Discrete input logic	Current sink auxiliary input (preset, enable and read) IEC 1131 Type 2 Resistive 2/3-wire proximity sensors PNP/NPN IEC 1131 Type 2 Resistive encoder input
Input logic	Positive
Input compatibility	Incremental encoder 10...30 V totem pole Incremental encoder 5 V DC RS422
Input voltage	24 V 18 mA 2/3-wire proximity sensors PNP/NPN 24 V 7 mA auxiliary input (preset, enable and read) 5 V 18 mA encoder input
Input voltage limits	<= 5.5 V encoder input 19...30 V 2/3-wire proximity sensors PNP/NPN 19...30 V auxiliary input (preset, enable and read)
Voltage state 1 guaranteed	>= 11 V 2/3-wire proximity sensors PNP/NPN >= 11 V auxiliary input (preset, enable and read) >= 2.4 V encoder input
Current state 1 guaranteed	>= 3.7 mA encoder input) >= 6 mA 2/3-wire proximity sensors PNP/NPN) >= 6 mA auxiliary input (preset, enable and read))
Voltage state 0 guaranteed	<= 1.2 V encoder input <= 5 V 2/3-wire proximity sensors PNP/NPN <= 5 V auxiliary input (preset, enable and read)
Current state 0 guaranteed	<= 1 mA encoder input) <= 2 mA 2/3-wire proximity sensors PNP/NPN) <= 2 mA auxiliary input (preset, enable and read))
Response time	< 2.5 ms sensor voltage at loss of 24 V auxiliary input (preset, enable and read)

Price is “List Price” and may be subject to a trade discount – check with your local distributor or retailer for actual price.

Disclaimer: This documentation is not intended as a substitute for and is not to be used for determining suitability or reliability of these products for specific user applications

Input impedance	Encoder input > 270 Ohm at U = 2.4 V 2/3-wire proximity sensors PNP/NPN 1400 Ohm at Un Auxiliary input (preset, enable and read) 3400 Ohm at Un Encoder input 400 Ohm at Un
Output voltage	24 V DC
nominal output current	0.5 A
Output voltage limits	19...30 V
Maximum voltage drop	<0.5 V at state 1
Output compatibility	Positive logic DC inputs (resistance <= 15 kOhm) auxiliary output
Maximum leakage current	0.1 mA
Switching frequency	< 0.6/LI² Hz on inductive load
Output overload protection	Thermal tripping via program or automatically Current limiter
Output short-circuit protection	Thermal tripping via program or automatically Current limiter
Output overvoltage protection	Zener diode
Reverse polarity protection	Reverse diode on supply
Checks	Sensor power supply
Current consumption	330 µA 5 V DC 36 mA 24 V DC
Module format	Standard
Local signalling	1 LED (green) for module operating (RUN) 1 LED (red) for external fault (I/O) 1 LED (red) for internal fault, module failure (ERR) 4 LEDs (green) for axis diagnostics available (CH.)
Electrical connection	2 connectors HE-10, 20 pins 4 connectors SUB-D 15
Product Weight	0.95 lb(US) (0.43 kg)

Environment

Protective treatment	TC
Ambient Air Temperature for Operation	32…140 °F (0…60 °C)
Ambient Air Temperature for Storage	-13…158 °F (-25…70 °C)
Relative Humidity	5…95 % without condensation
Operating altitude	<= 6561.68 ft (2000 m)

Ordering and shipping details

Category	US1PC2222558
Discount Schedule	PC22
GTIN	3389110756982
Returnability	No

Packing Units

Unit Type of Package 1	PCE
Nbr. of units in pkg.	1
Package 1 Height	2.4 in (6.0 cm)

Package 1 Width	7.09 in (18.0 cm)
Package 1 Length	10.2 in (26.0 cm)
Package weight(Lbs)	20.1 oz (570.0 g)

Contractual warranty

Warranty (in months)	18

Environmental Data

Schneider Electric aims to achieve Net Zero status by 2050 through supply chain partnerships, lower impact materials, and circularity via our ongoing “Use Better, Use Longer, Use Again” campaign to extend product lifetimes and recyclability.

Environmental Data explained >

How we assess product sustainability >

Use Better

Materials and Substances

California proposition 65	**WARNING: This product can expose you to chemicals including: Lead and lead compounds which is known to the State of California to cause cancer and birth defects or other reproductive harm.For more information go to www.p65warnings.ca.gov**

Use Longer

Lifetime extension

Repair	**No**

Dimensions Drawings

Standard and Extendable Racks for Modules Mounting

Dimensions of Modules and Racks

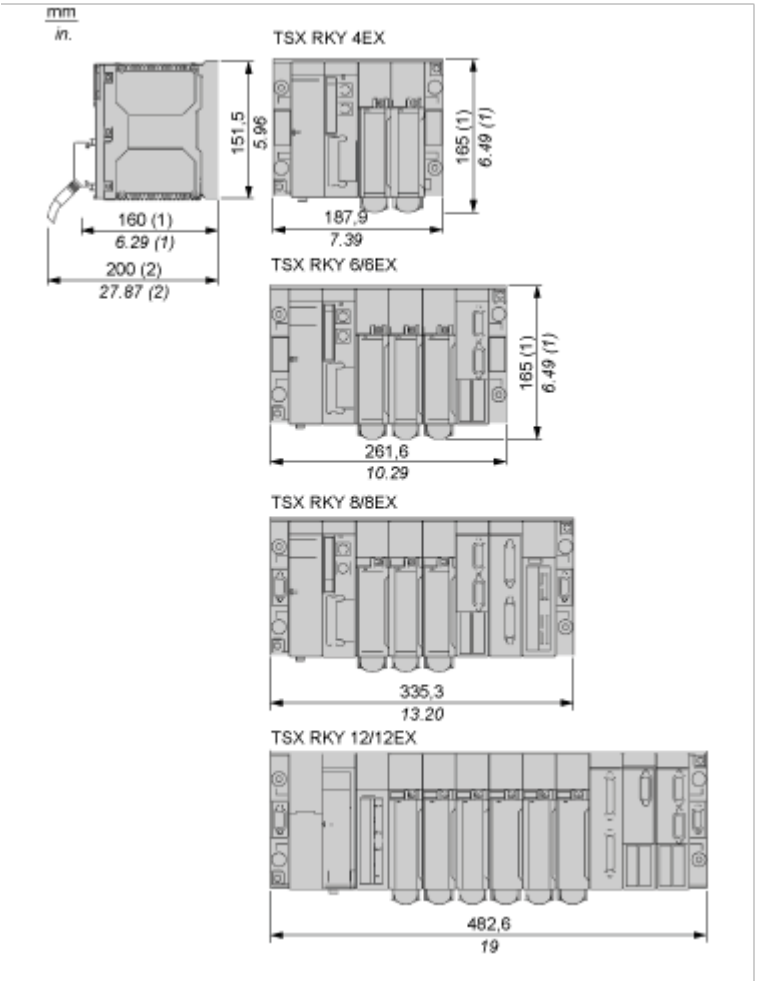

(**1**) With screw terminal block modules.
(**2**) Maximum depth for all types of modules and their associated connectors.

Connections and Schema

15-pin SUB-D Connectors of the Counting Module

Pinout Configuration

Standard 15-pin SUB-D connector for connecting the counting sensor to channels 0, 1, 2 or 3

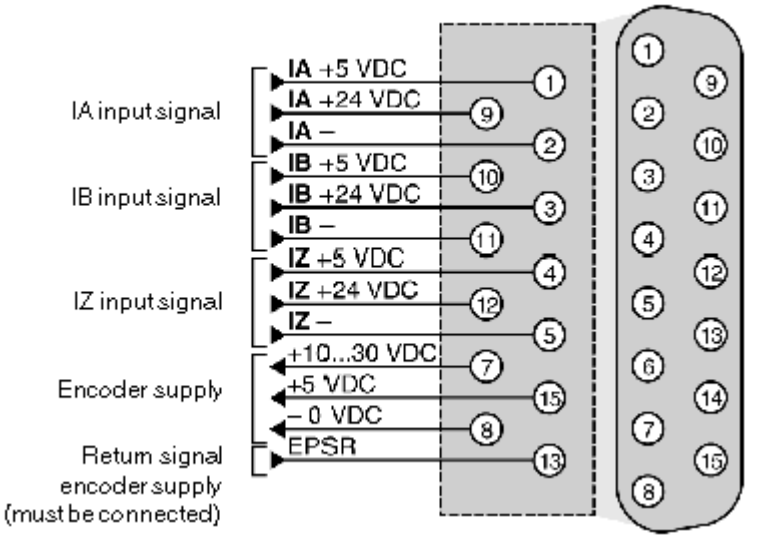

5 Vdc signal	Pins
+ IA input	1
- IA input	2
+ IB input	10
- IB input	11
+ IZ input	4
- IZ input	5
Encoder power supply:	
+5 Vdc	15
-0 Vdc	8
Encoder power supply feedback	13

10…30 Vdc signals	Pins
+ IA input	9
- IA input	2
+ IB input	3
- IB input	11

10…30 Vdc signals	Pins
+ IZ input	12
- IZ input	5
Encoder power supply:	
+10…30 Vdc	7
-0 Vdc	8
Encoder power supply feedback	13

HE10 20-pin Connector of the Counting Module

Wiring Diagram

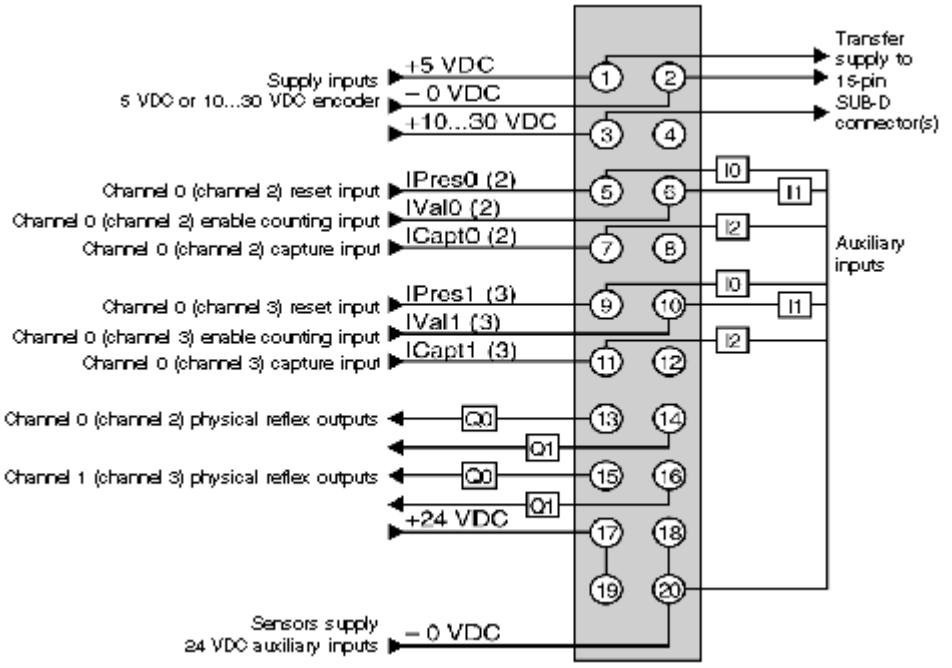

24 Vdc signals	Pins
Channel 0 (channel 2) auxiliary input:	
Preset IPres0/2	5
Confirmation IVal0/2	6
Capture ICapt0/2	7
Channel 1 (channel 3) auxiliary input:	
Preset IPres1/3	9
Confirmation IVal1/3	10
Capture ICapt1/3	11
Channel 0 (channel 2) reflex output:	
Output Q0	13
Output Q1	14
Channel 1 reflex output:	
Output Q0	15
Output Q1	16

Power Supplies	Pins
Encoder power supply:	
+5 Vdc	1
- 0 Vdc	2
+10...30 Vdc	3
Sensor power supply:	
+24 Vdc	17 or 19
-0 Vdc	18 or 20

Image of product / Alternate images

Alternative

