Product data sheet

Specifications



soft starter for asynchronous motor, Altistart U01, TeSys U, ATSU01, 9A, 200 to 480V, 1.5 to 4kW

ATSU01N209LT

Product availability: Non-Stock - Not normally stocked in distribution facility

Main

Range of Product	Altistart U01 and TeSys U
Product destination	Asynchronous motors
Product or Component Type	Soft starter
Product Specific Application	Simple machine
Device short name	ATSU01
Phase	3 phase
[Us] rated supply voltage	200...480 V - 10...10 %
Motor power kW	4 kW, 3 phase 400 V 1.5 kW, 3 phase 230 V
Maximum Horse Power Rating	2 hp, 3 phase 230 V 5 hp, 3 phase 460 V
IcL starter rating	9 A
Utilisation category	AC-53B EN/IEC 60947-4-2
Current consumption	65 mA
Type of start	Start with voltage ramp
Power dissipation in W	1.5 W at full load and at end of starting 91.5 W in transient state

Complementary

Assembly style	With heat sink
Function Available	Integrated bypass
Supply voltage limits	180…528 V
Supply frequency	50...60 Hz - 5...5 %
Network Frequency	47.5...63 Hz
Output voltage	<= power supply voltage
[Uc] Control circuit voltage	24 V DC +/- 10 %
Starting time	1 s / 100 5 s / 20 10 s / 10 Adjustable from 1 to 10 s
Deceleration time symb	Adjustable from 1 to 10 s
Starting torque	30...80 % of starting torque of motor connected directly on the line supply
Discrete input type	Logic LI1, LI2, BOOST) stop, run and boost on start-up functions <= 8 mA 27 kOhm
Discrete input voltage	24...40 V

Price is “List Price” and may be subject to a trade discount – check with your local distributor or retailer for actual price.

Disclaimer: This documentation is not intended as a substitute for and is not to be used for determining suitability or reliability of these products for specific user applications

Input output isolation	Galvanic between power and control
Discrete input logic	Positive LI1, LI2, BOOST < 5 V <= 0.2 mA > 13 V, >= 0.5 mA
Discrete output current	2 A DC-13 3 A AC-15
Discrete output type	Open collector logic LO1 end of starting signal Relay outputs R1A, R1C NO
Discrete output voltage	24 V 6...30 V) open collector logic
Minimum switching current	10 mA 6 V DC relay outputs
Maximum switching current	Relay outputs 2 A 30 V DC cos phi = 0.5 20 ms inductive Relay outputs 2 A 250 V AC AC-15 cos phi = 0.5 20 ms inductive
Maximum switching voltage	440 V relay outputs
Display type	1 LED Green)starter powered up 1 LED Yellow)nominal voltage reached
Tightening torque	4.4 lbf.in (0.5 N.m) 16.8…22.1 lbf.in (1.9…2.5 N.m)
Electrical connection	4 mm screw clamp terminal - rigid 1 1...10 mm² AWG 8 power circuit Screw connector - rigid without cable end 1 0.5...2.5 mm² AWG 14 control circuit 4 mm screw clamp terminal - rigid 2 1...6 mm² AWG 10 power circuit Screw connector - rigid 2 0.5...1 mm² AWG 17 control circuit Screw connector - flexible with cable end 1 0.5...1.5 mm² AWG 16 control circuit 4 mm screw clamp terminal - flexible without cable end 1 1.5...10 mm² AWG 8 power circuit Screw connector - flexible without cable end 1 0.5...2.5 mm² AWG 14 control circuit 4 mm screw clamp terminal - flexible with cable end 2 1...6 mm² AWG 10 power circuit 4 mm screw clamp terminal - flexible without cable end 2 1.5...6 mm² AWG 10 power circuit Screw connector - flexible without cable end 2 0.5...1.5 mm² AWG 16 control circuit
Marking	CE
Operating position	Vertical +/- 10 degree
Height	9.2 in (234 mm)
Width	1.8 in (45 mm)
Depth	5.9 in (150 mm)
Product Weight	0.75 lb(US) (0.34 kg)
Power range	1.1…2 kW 200…240 V 3 phase 2.2…3 kW 380…440 V 3 phase 4…6 kW
Motor starter type	Soft starter

Environment

Electromagnetic compatibility	Conducted and radiated emissions level B conforming to CISPR 11 Conducted and radiated emissions level B conforming to IEC 60947-4-2 Damped oscillating waves level 3 conforming to IEC 61000-4-12 Electrostatic discharge level 3 conforming to IEC 61000-4-2 EMC immunity conforming to EN 50082-1 EMC immunity level B conforming to EN 50082-2 Harmonics level 3 conforming to IEC 1000-3-2 Harmonics level 3 conforming to IEC 1000-3-4 Immunity to electrical transients level 4 conforming to IEC 61000-4-4 Immunity to radiated radio-electrical interference level 3 conforming to IEC 61000-4-3 Voltage/current impulse level 3 conforming to IEC 61000-4-5 Conducted and radiated emissions level 3 conforming to IEC 61000-4-6 Immunity to conducted interference caused by radio-electrical fields level 4 conforming to IEC 61000-4-11
Standards	EN/IEC 60947-4-2

Product Certifications	UL C-tick CSA CCC
IP Degree of Protection	IP20
Pollution degree	2 EN/IEC 60947-4-2
Vibration resistance	1 gn (f= 13…150 Hz) conforming to EN/IEC 60068-2-6 1.5 mm peak to peak (f= 3…13 Hz) conforming to EN/IEC 60068-2-6
Shock resistance	15 gn 11 ms EN/IEC 60068-2-27
Relative humidity	5…95 % without condensation or dripping water EN/IEC 60068-2-3
Ambient air temperature for operation	14…104 °F (-10…40 °C) (without derating) 104…122 °F (40…50 °C) (with current derating of 2 % per °C)
Ambient air temperature for storage	-13…158 °F (-25…70 °C) EN/IEC 60947-4-2
Operating altitude	<= 3280.84 ft (1000 m) without derating > 3280.84 ft (1000 m) with current derating of 2.2 % per additional 100 m

Ordering and shipping details

Category	US10I1122392
Discount Schedule	0I11
GTIN	3389110667097
Returnability	Yes
Country of origin	DE

Packing Units

Unit Type of Package 1	PCE
Nbr. of units in pkg.	1
Package 1 Height	2.559 in (6.500 cm)
Package 1 Width	7.283 in (18.500 cm)
Package 1 Length	6.496 in (16.500 cm)
Package weight(Lbs)	16.014 oz (454.000 g)
Unit Type of Package 2	S03
Number of Units in Package 2	14
Package 2 Height	11.811 in (30.000 cm)
Package 2 Width	11.811 in (30.000 cm)
Package 2 Length	15.748 in (40.000 cm)
Package 2 Weight	15.223 lb(US) (6.905 kg)

Contractual warranty

Warranty (in months)	18

Environmental Data

Schneider Electric aims to achieve Net Zero status by 2050 through supply chain partnerships, lower impact materials, and circularity via our ongoing “Use Better, Use Longer, Use Again” campaign to extend product lifetimes and recyclability.

Environmental Data explained >

How we assess product sustainability >

Use Better

Materials and Substances

Packaging made with recycled cardboard	**Yes**
Packaging without single use plastic	**Yes**
EU RoHS Directive	**Compliant**
REACh Regulation	**Free of Substances of Very High Concern above the threshold**
California proposition 65	**WARNING: This product can expose you to chemicals including: Lead and lead compounds, which is known to the State of California to cause cancer and birth defects or other reproductive harm. For more information go to www.P65Warnings.ca.gov**

Use Longer

Lifetime extension

Repair	**No**

Use Again

Repack and remanufacture

Take-back	**No**
WEEE Label	 **The product must be disposed on European Union markets following specific waste collection and never end up in rubbish bins.**

Dimensions Drawings

Dimensions

With TeSys U Combination (Non Reversing Power Base)

Mounting on symetrical (35 mm) rail with power connector between ATS and TeSys U.

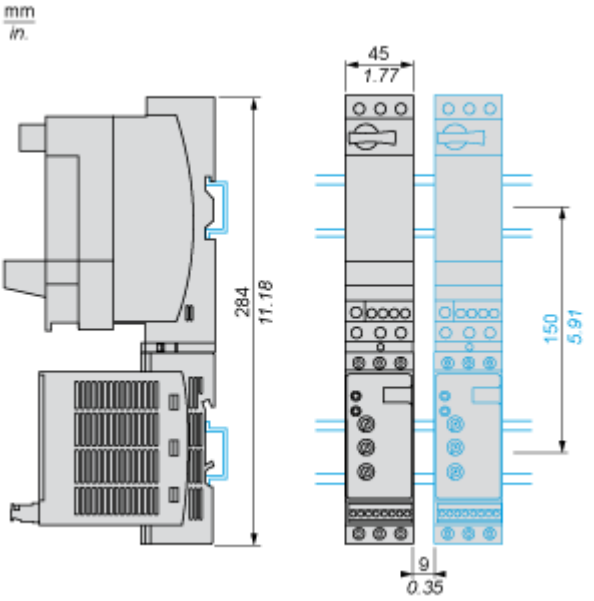

With TeSys U Combination (Non Reversing or Reversing Power Base)

Side by side mounting

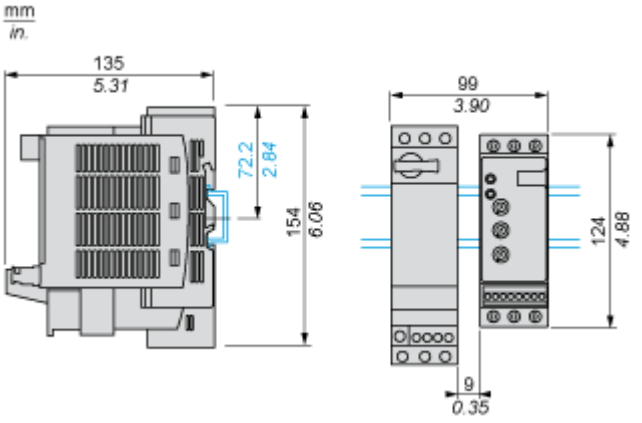

Connections and Schema

Power Wiring

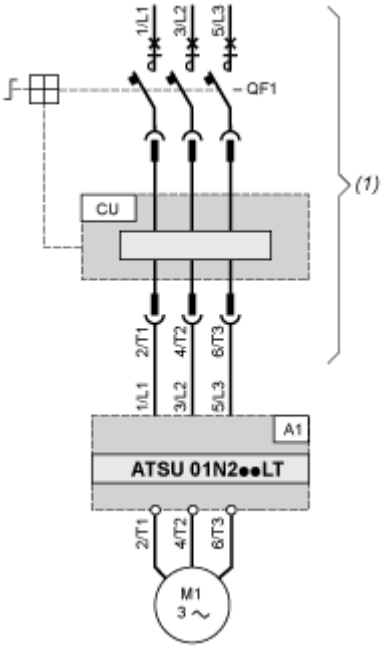

(1) TeSys U

A1 : Soft start/soft stop unit

QF1 : TeSys U controller-starter

CU : TeSys U control unit

With Reversing Unit

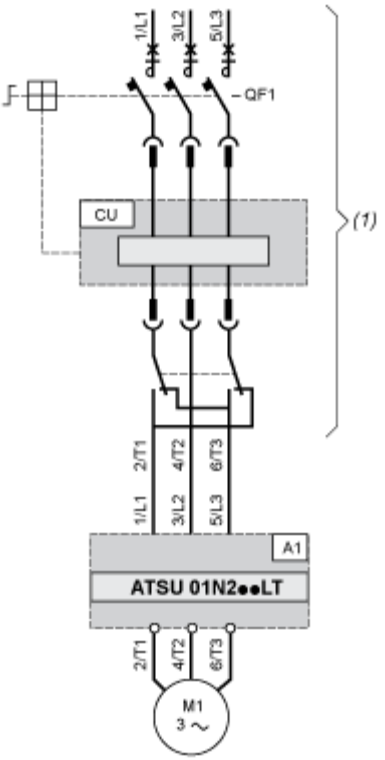

(1) TeSys U with reversing unit

A1 : Soft start/soft stop unit

QF1 : TeSys U controller-starter

CU : TeSys U control unit

Control Wiring

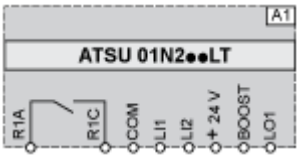

A1 : Soft start/soft stop unit

R1A, R1C : Relay output NO

COM : Commun

LI1, LI2 : Logic inputs (stop and run functions)

BOOST : Logic input (boost on start-up function)

LO1 : Logic output

Technical Description

Functional Diagram Automatic 2-wire Control

Without Deceleration

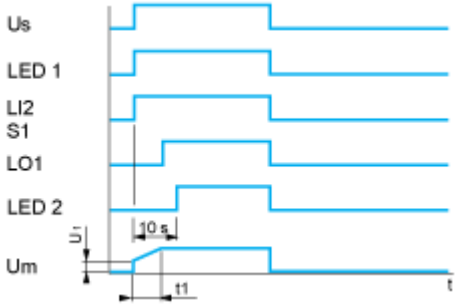

Us : Power supply voltage

LED 1 : Green LED

LI2 : Logic input

S1 : Pushbutton

LED 2 : Yellow LED

Um : Motor voltage

t1 : Acceleration time can be controlled by a potentiometer

U1 : Starting time can be controlled by a potentiometer

With and without Deceleration

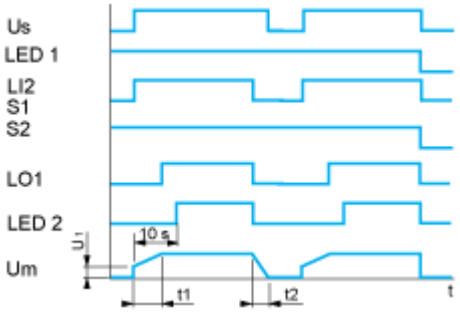

Us : Power supply voltage

LED 1 : Green LED

LI2 : Logic input

S1, S2 : Pushbuttons

LO1 : Logic output

LED 2 : Yellow LED

Um : Motor voltage

t1 : Acceleration time can be controlled by a potentiometer

t2 : Deceleration time can be controlled by a potentiometer

U1 : Starting time can be controlled by a potentiometer

Functional Diagram Automatic 3-wire Control

Without Deceleration

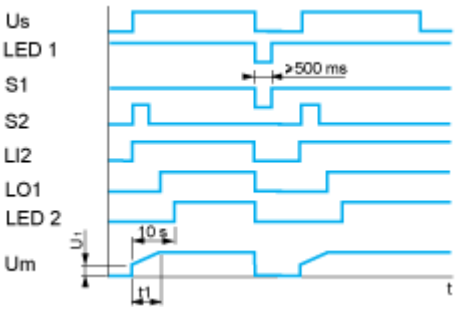

Us : Power supply voltage

LED 1 : Green LED

S1, S2 : Pushbuttons

LI2 : Logic input

LO1 : Logic output

LED 2 : Yellow LED

Um : Motor voltage

t1 : Acceleration time can be controlled by a potentiometer

U1 : Starting time can be controlled by a potentiometer

With Deceleration

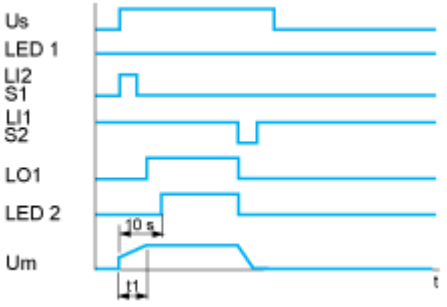

Us : Power supply voltage

LED 1 : Green LED

S1, S2 : Pushbuttons

LI1, LI2 : Logic inputs

LO1 : Logic output

LED 2 : Yellow LED

Um : Motor voltage

t1 : Acceleration time can be controlled by a potentiometer