Product data sheet

Specifications



Soft starter, Altivar Soft Starter ATS490, 170A, 208 to 690V AC, control supply 110 to 230V AC

ATS490C17Y

Product availability: Stock - Normally stocked in distribution facility

Main

Range of Product	Altivar Soft Starter ATS490
Product or Component Type	Soft starter
Product destination	Asynchronous motors
Product Specific Application	Process and infrastructures
Device short name	ATS490
Phase	3 phase
Utilisation category	AC-3A AC-53A
Ue power supply voltage	208...690 V AC - 15...10 %)
power supply frequency	50...60 Hz - 20...20 %
[Ie] rated operational current	Normal duty 170 A in line 104 °F (40 °C))
Service factor at Ie	100
rated current in heavy duty	140 A at 104 °F (40 °C) heavy duty
Torque control	True
IP Degree of Protection	IP00
Motor power kW	45 kW 230 V in the motor supply line normal duty 90 kW 400 V in the motor supply line normal duty 90 kW 440 V in the motor supply line normal duty 110 kW 500 V in the motor supply line normal duty 110 kW 525 V in the motor supply line normal duty 132 kW 660 V in the motor supply line normal duty 160 kW 690 V in the motor supply line normal duty 37 kW 230 V in the motor supply line heavy duty 75 kW 400 V in the motor supply line heavy duty 75 kW 440 V in the motor supply line heavy duty 90 kW 500 V in the motor supply line heavy duty 90 kW 525 V in the motor supply line heavy duty 110 kW 660 V in the motor supply line heavy duty 110 kW 690 V in the motor supply line heavy duty 90 kW 230 V to the motor delta terminals normal duty 132 kW 400 V to the motor delta terminals normal duty 75 kW 230 V to the motor delta terminals heavy duty 110 kW 400 V to the motor delta terminals heavy duty
Maximum Horse Power Rating	50 hp 208 V normal duty 60 hp 230 V normal duty 125 hp 460 V normal duty 150 hp 575 V normal duty 40 hp 208 V heavy duty 50 hp 230 V heavy duty 100 hp 460 V heavy duty 125 hp 575 V heavy duty
With safety function Safe torque off (STO)	True
Safe Torque Off (STO)	STO (safe torque off): SIL 1 conforming to IEC 61508 STO (safe torque off): PL c/category 2 conforming to ISO 13849

Price is “List Price” and may be subject to a trade discount – check with your local distributor or retailer for actual price.

Disclaimer: This documentation is not intended as a substitute for and is not to be used for determining suitability or reliability of these products for specific user applications

Cybersecurity functions	True
Cybersecurity level and standard	Security level (SL) 1 IEC 62443-4-2
Communication Port Protocol	Modbus serial Modbus TCP/EtherNet/IP
Option card	Communication module CANopen daisy chain Communication module CANopen Sub-D Communication module CANopen open style Communication module Profibus DP V1 Communication module PROFINET

Complementary

Device connection	In the motor supply line Inside delta
Overload current profile	400 % Ie for 13 s
On-load factor	50 %
Operating cycles/hour	10 cyc/h
[Us] control circuit voltage	110...230 V AC 50-60 Hz - 15...10 %
Apparent power	80 VA
Integrated motor overload protection	True
motor thermal protection class	Class 10E
Protection type	Phase failure mains Thermal protection starter Thermal protection motor Current overload motor Motor underload motor Excessive acceleration time motor Motor phase loss detection motor Protection against line phase inversion mains External thermal protection motor Protection delta inside wiring starter Short-circuit between motor phase and earth motor
current limiting %In (5 x Ie maximum)	150…700 %
[In] Rated current pwr loss specifctn	170 A
Power loss static current independent	19 W
Power loss per device current dependent	38 W
Power loss during starting	2101 W during starting at 40 °C at 400% Ie
Standards	EN/IEC 60947-4-2 UL 60947-4-2 IEC 60664-1
Product Certifications	CE cULus UKCA RCM CCC DNV ATEX EAC KC
Marking	CE CULus UKCA RCM CCC ATEX EAC KC

[Uc] control circuit voltage	24 V DC
Discrete input number	5
Discrete input type	DI1) digital input, 4.4 kOhm DI2) digital input, 4.4 kOhm DI3) digital input, 4.4 kOhm DI4) digital input, 4.4 kOhm STO) digital input, > 1 kOhm
Input compatibility	DI1 discrete input level 1 PLC EN/IEC 61131-2 DI2 discrete input level 1 PLC EN/IEC 61131-2 DI3 discrete input level 1 PLC EN/IEC 61131-2 DI4 discrete input level 1 PLC EN/IEC 61131-2 STO discrete input level 1 PLC EN/IEC 61131-2
Discrete input logic	Digital input DI1 0...< 5 V <= 2 mA > 11 V, >= 5 mA Digital input DI2 0...< 5 V <= 2 mA > 11 V, >= 5 mA Digital input DI3 0...< 5 V <= 2 mA > 11 V, >= 5 mA Digital input DI4 0...< 5 V <= 2 mA > 11 V, >= 5 mA Digital input STO 0...< 5 V <= 2 mA > 11 V, >= 5 mA
Relay output number	3
Relay output type	Relay outputs R1A, R1C NO Relay outputs R2A, R2C NO Relay outputs R3A, R3C NO
Minimum switching current	100 mA 12 V DC relay outputs
Maximum switching current	Relay outputs 2 A / 250 V AC for AC-15 100000 cycles following IEC 60947-5-1 Relay outputs 2 A / 30 V DC for DC-13 150000 cycles following IEC 60947-5-1
Discrete output number	2
Discrete output type	Programmable digital output DQ1 <= 30 V 100 mA Programmable digital output DQ2 <= 30 V 100 mA
Output compatibility	Open collector level 1 PLC IEC 65A-68
Analogue input number	1
Analogue input type	AI1/PTC1 : PTC/PT 100/PT 1000/KTY84 temperature probe PTC2 : PTC/PT 100/PT 1000/KTY84 temperature probe PTC3 : PTC/PT 100/PT 1000/KTY84 temperature probe
Analogue output number	1
Analogue output type	Current output AQ1 : 0...20 mA/4...20 mA , impedance< 500 Ohm Voltage output AQ1 : 0...10 V , impedance> 470 Ohm
Communication port protocol	Modbus serial Modbus TCP/EtherNet/IP
Connector type	1 RJ45 for connecting Modbus serial 1 RJ45 for connecting Modbus TCP/EtherNet/IP
Physical interface	2-wire RS 485 100-BASE-TX category 5 or industrial Ethernet
Transmission frame	RTU TCP/UDP
Transmission Rate	4.8…38.4 kbps 100 BASE TX
Data format	8 bits, configurable odd, even or no parity 1or 2 stop
Number of addresses	0…247 Modbus serial
Method of access	Slave Modbus serial
Type of polarization	No impedance Modbus serial
Display screen available	True
Operating position	Vertical +/- 10 degree
Height	14.02 in (356 mm)

Width	6.3 in (160 mm)
Depth	9.3 in (235 mm)
Product Weight	22.05 lb(US) (10 kg)
internal bypass	True
Function Available	Pre-heating Smoke extraction Second motor set Deceleration with torque control Braking Boost Line contactor control Reverse contactor control Anti-jam Jog Borehole pump starting Condition monitoring Power monitoring Cybersecure firmware update
material declaration	True

Environment

Electromagnetic compatibility	Conducted and radiated emissions level A conforming to IEC 60947-4-2 Damped oscillating waves level 3 conforming to IEC 61000-4-18 Electrostatic discharge level 3 conforming to IEC 61000-4-2 Immunity to electrical transients level 4 conforming to IEC 61000-4-4 Immunity to radiated radio-electrical interference level 3 conforming to IEC 61000-4-3 Voltage/current impulse level 3 conforming to IEC 61000-4-5 Immunity to conducted interference caused by radio-electrical fields level 3 conforming to EN/IEC 61000-4-6
Pollution degree	Level 3
[Uimp] rated impulse withstand voltage	6 kV
[Ui] Rated Insulation Voltage	690 V
Environmental class (during operation)	Class 3C3 according to IEC 60721-3-3 Class 3S3 according to IEC 60721-3-3
Ambient air temperature for operation	-13…104 °F (-25…40 °C) (without derating) 104…140 °F (40…60 °C) (with current derating of 1 % per °C above 40 °C)
Ambient Air Temperature for Storage	-40…158 °F (-40…70 °C)
Ambient air transport temperature	-40…158 °F (-40…70 °C)
Operating altitude	<= 6561.68 ft (2000 m) without derating > 2000...4800 m with current derating 1 % per 100 m above 2000 m
Relative humidity	5…95 % without condensation or dripping water EN/IEC 60068-2-3
Maximum deflection under vibratory load (during operation)	1.5 mm at 2...13 Hz
Maximum deflection under vibratory load (during storage)	1.75 mm at 2...9 Hz
Maximum deflection under vibratory load (during transport)	1.75 mm at 2...9 Hz
Maximum acceleration under vibrational stress (during operation)	1 gn at 13…200 Hz
Maximum acceleration under vibratory load (during storage)	1 gn at 9…200 Hz 1.5 gn at 200…500 Hz
Maximum acceleration under vibratory load (during transport)	1 gn at 9…200 Hz 1.5 gn at 200…500 Hz
Maximum acceleration under shock impact (during operation)	15 gn at 11 ms
Maximum acceleration under shock load (during storage)	10 gn at 11 ms

Maximum acceleration under shock load (during transport)	10 gn at 11 ms

Ordering and shipping details

Category	US1CP1G22588
Discount Schedule	CP1G
GTIN	3606486948859
Returnability	Yes
Country of origin	ID

Packing Units

Unit Type of Package 1	PCE
Nbr. of units in pkg.	1
Package 1 Height	8.858 in (22.500 cm)
Package 1 Width	10.827 in (27.500 cm)
Package 1 Length	17.913 in (45.500 cm)
Package weight(Lbs)	25.325 lb(US) (11.487 kg)
Unit Type of Package 2	S06
Number of Units in Package 2	6
Package 2 Height	29.528 in (75.000 cm)
Package 2 Width	23.622 in (60.000 cm)
Package 2 Length	31.496 in (80.000 cm)
Package 2 Weight	176.370 lb(US) (80.000 kg)

Contractual warranty

Warranty (in months)	18

Environmental Data

Schneider Electric aims to achieve Net Zero status by 2050 through supply chain partnerships, lower impact materials, and circularity via our ongoing “Use Better, Use Longer, Use Again” campaign to extend product lifetimes and recyclability.

Environmental Data explained >

How we assess product sustainability >

Environmental footprint

Total lifecycle Carbon footprint	**1 798 kg CO2 eq.**
Carbon footprint of the manufacturing phase [A1 to A3]	**186 kg CO2 eq.**
Carbon footprint of the distribution phase [A4]	**2 kg CO2 eq.**
Carbon footprint of the installation phase [A5]	**2 kg CO2 eq.**
Carbon footprint of the use phase [B2, B3, B4, B6]	**1 586 kg CO2 eq.**
Carbon footprint of the end-of-life phase [C1 to C4]	**21 kg CO2 eq.**
Environmental Disclosure	**Product Environmental Profile**

Use Better

Materials and Substances

Packaging made with recycled cardboard	**Yes**
Packaging without single use plastic	**No**
SCIP Number	**Ad580e30-2d60-4293-925f-7543321d7bab**
EU RoHS Directive	**Compliant By Exemption**
REACh Regulation	**Reference contains Substances of Very High Concern above the threshold**
California proposition 65	**WARNING: This product can expose you to chemicals including: Lead and lead compounds, which is known to the State of California to cause cancer and birth defects or other reproductive harm. For more information go to www.P65Warnings.ca.gov**
PVC free	**Yes**

Use Longer

Lifetime extension

Repair	**No**

Use Again

Repack and remanufacture

Recyclability potential, in %	**78**
Removable battery	**Yes**
Take-back	**No**
WEEE Label	**The product must be disposed on European Union markets following specific waste collection and never end up in rubbish bins.**

Dimensions Drawings

Dimensions

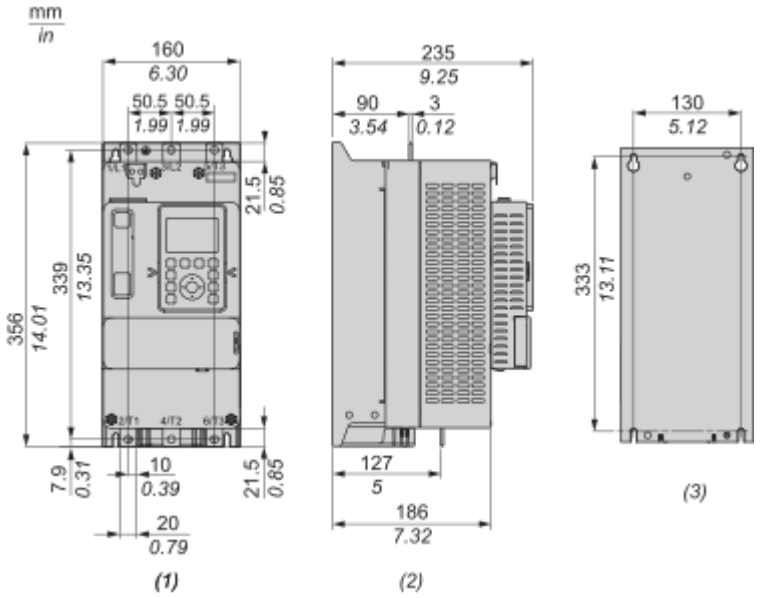

(1) : Front
(2) : Side
(3) : Rear

Mounting and Clearance

Mounting Position

The soft starter is designed to be mounted inside cabinets vertically at ± 10° for cooling purposes.
Respect the minimum clearances so that the cooling air can circulate from the bottom to the top of the soft starter. The minimum clearances apply to any device close to the soft starter such as circuit breakers, fuses and contactors.
Do not install the soft starter above heating elements.

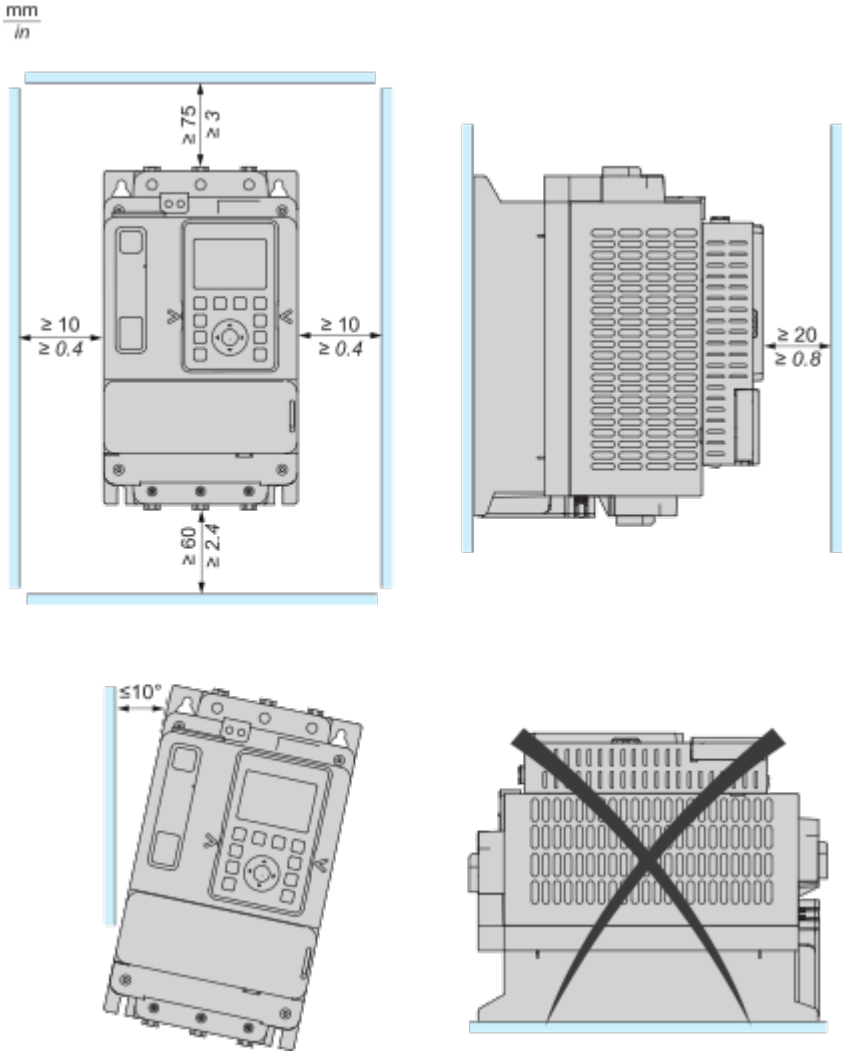

Connections and Schema

Wiring

Wiring the Power Part

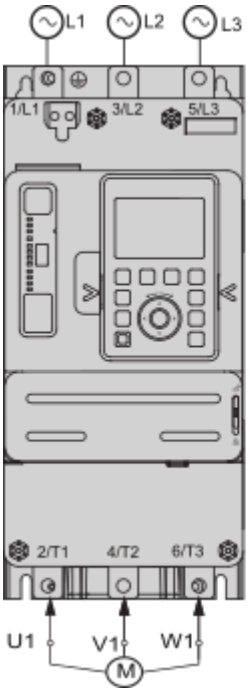

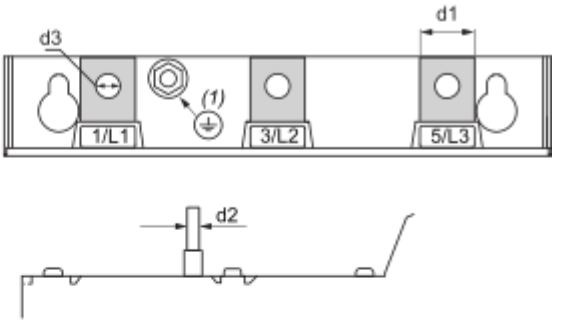

1/L1, 3/L2, 5/L3 : Mains supply inputs
2/T1, 4/T2, 6/T3 : Outputs to motor
(1) : Ground connection

Connection In Line, No Line Contactor, Type 1 or 2 Coordination, 2-wire or 3-wire control

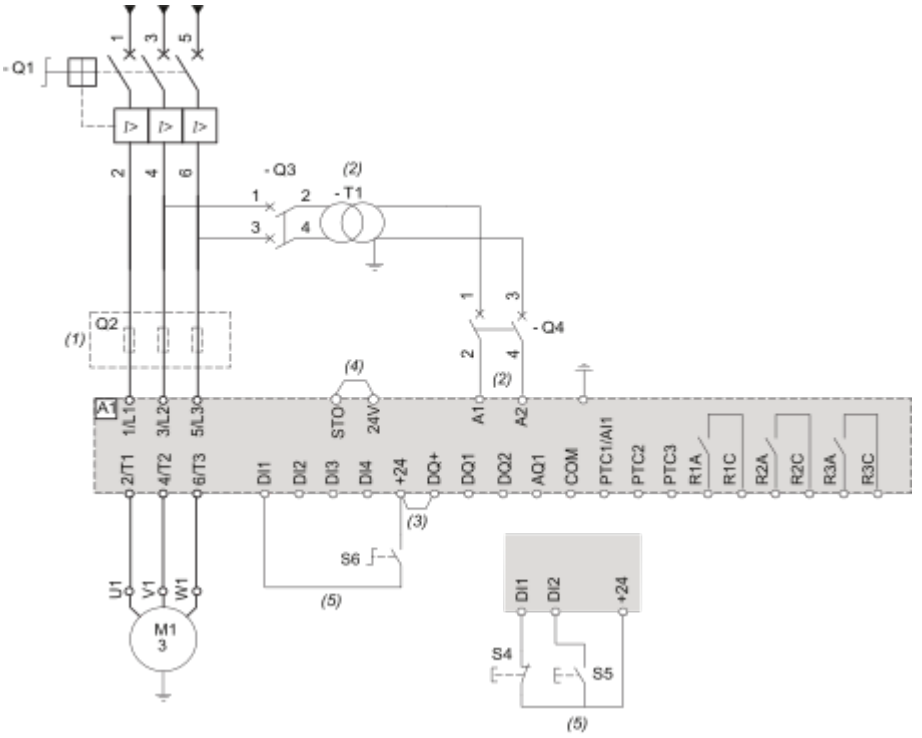

(1) : Installation of additional fast-acting fuses is mandatory to upgrade to type 2 coordination according to IEC 60947–4–2.

(2) : The transformer must supply 110...230 Vac +10% - 15%, 50/60Hz.
(3) : 24Vdc supply on DQ+ if usage of DQ outputs.
(4) : STO Safe Torque Off
(5) : 3–wire control and 2–wire control.

Designation	Component	Description
Q1	Circuit breaker	Short circuit protection device for the motor
Q2	Fast acting fuses	Short circuit protection device of the soft starter to be used only when type 2 coordination
Q3	Circuit breaker	Short circuit protection device for the primary of the transformer
Q4	Circuit breaker	Short circuit protection device for the secondary of the transformer
S4	Normally close contact push- button	STOP command for 3-wire control
S5	Normally open contact push- button	RUN command for 3-wire control
S6	Selector switch, 2 positions, stay–put, normally open contact	RUN/STOP command for 2-wire control

Connection In Line, With Line Contactor, Type 1 or 2 Coordination, 2-wire or 3-wire control

Line contactor controlled by Power ON and Power OFF push-buttons or on detected error
Use relay output R1 set to **[Operating State Fault]** (factory setting)

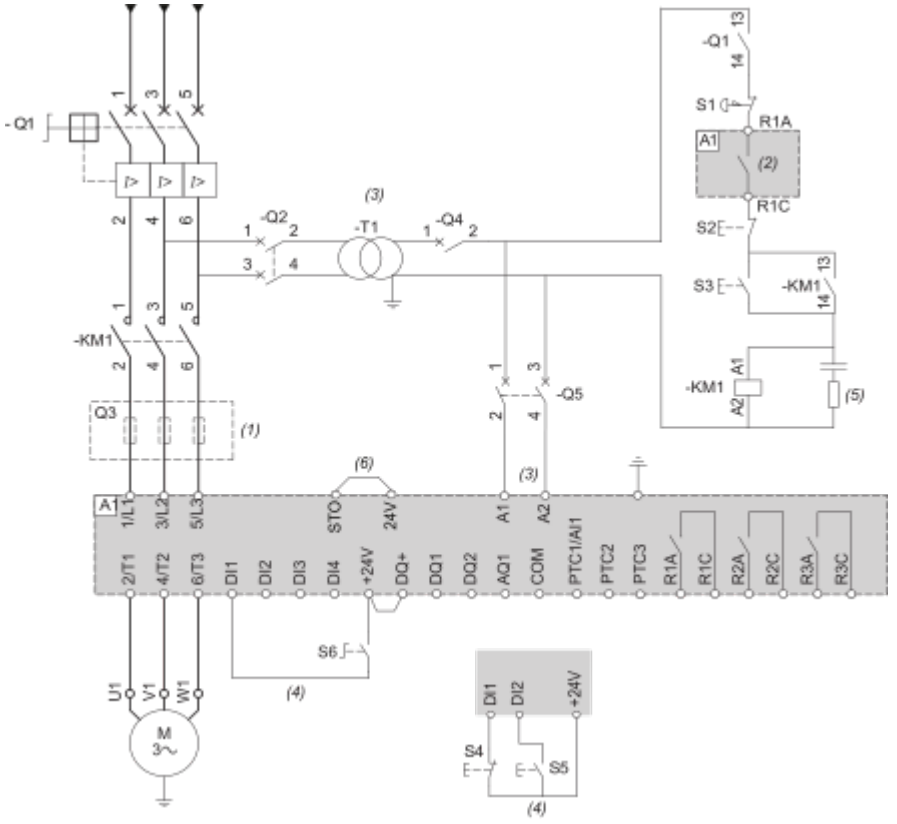

(1) : Installation of additional fast-acting fuses is mandatory to upgrade to type 2 coordination according to IEC 60947–4–2.
(2) : Take into account the electrical characteristics of the relays.
(3) : The transformer must supply 110...230 Vac +10% - 15%, 50/60Hz.
(4) : 3–wire control and 2–wire control.

(5) : Select the appropriate voltage surge suppressor.
(6) : STO Safe Torque Off

Designation	Component	Description
Q1	Circuit breaker	Short circuit protection device for the motor
Q2	Circuit breaker	Short circuit protection device for the primary of the transformer
Q3	Fast acting fuses	Short circuit protection device of the soft starter to be used only when type 2 coordination
Q4	Circuit breaker	Short circuit protection device for the secondary of the transformer
Q5	Circuit breaker	Short circuit protection device for the control part of the soft starter
KM1	Contactor	Line contactor
S1	Emergency Stop push-button	Emergency Stop to de-energized KM1 line contactor
S2	Normally close push-button	Power OFF
S3	Normally open push-button	Power ON
S4	Normally close contact push-button	STOP command for 3-wire control
S5	Normally open contact push-button	RUN command for 3-wire control
S6	Selector switch, 2 positions, stay–put, normally open contact	RUN/STOP command for 2-wire control

Connection In Line, With Line Contactor, Type 1 or 2 Coordination, 2-wire control

Line contactor controlled based on RUN & STOP or on detected error.
Use relay output R1 set to **[Mains Contactor]**

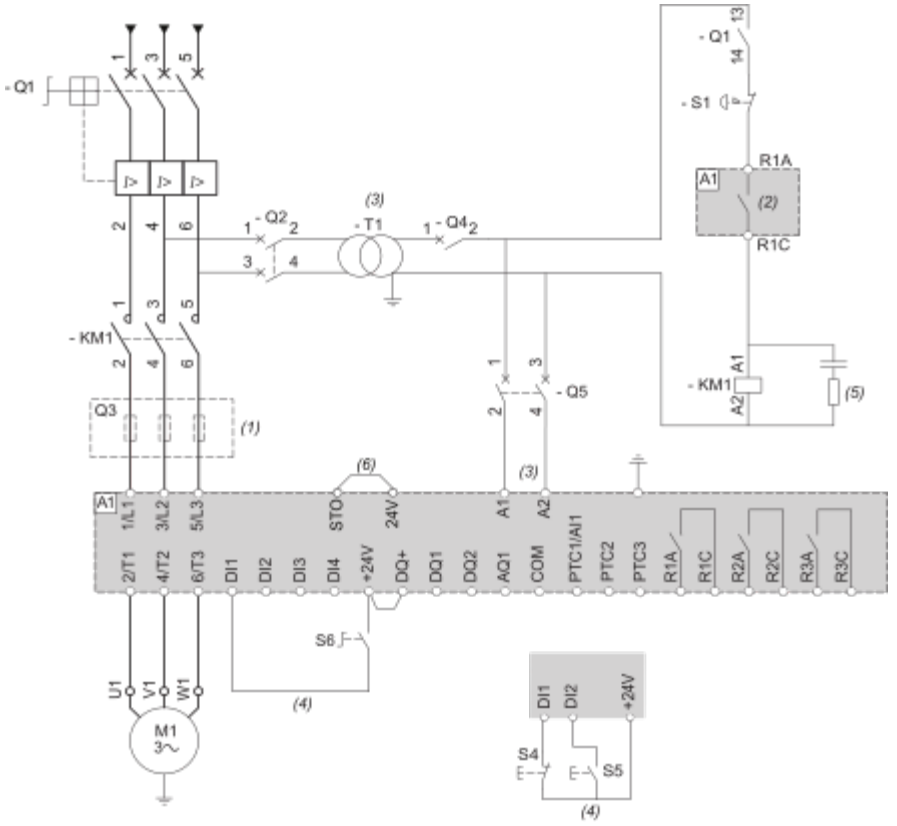

(1) : Installation of additional fast-acting fuses is mandatory to upgrade to type 2 coordination according to IEC 60947–4–2.
(2) : Take into account the electrical characteristics of the relays.
(3) : The transformer must supply 110...230 Vac +10% - 15%, 50/60Hz.
(4) : 2–wire control and 3–wire control.
(5) : Select the appropriate voltage surge suppressor.
(6) : STO Safe Torque Off.

Designation	Component	Description
Q1	Circuit breaker	Short circuit protection device for the motor
Q2	Circuit breaker	Short circuit protection device for the primary of the transformer
Q3	Fast acting fuses	Short circuit protection device of the soft starter to be used only when type 2 coordination according to IEC 60947-4-2 is required
Q4	Circuit breaker	Short circuit protection device for the secondary of the transformer
Q5	Circuit breaker	Short circuit protection device for the control part of the soft starter
KM1	Contactor	Line contactor
S1	Emergency Stop push-button	Emergency Stop to de-energized KM1 line contactor
S4	Normally close contact push-button	STOP command for 3-wire control
S5	Normally open contact push-button	RUN command for 3-wire control

S6	Selector switch, 2 positions, stay–put, normally open contact	RUN/STOP. command for 2–wire control

Connection Inside the Delta, Type 1 and 2 Coordination, 2-wire or 3-wire

Line contactor controlled based on RUN and STOP command or detected error

Use relay output R1 set to **[Operating State Fault]** (factory setting).

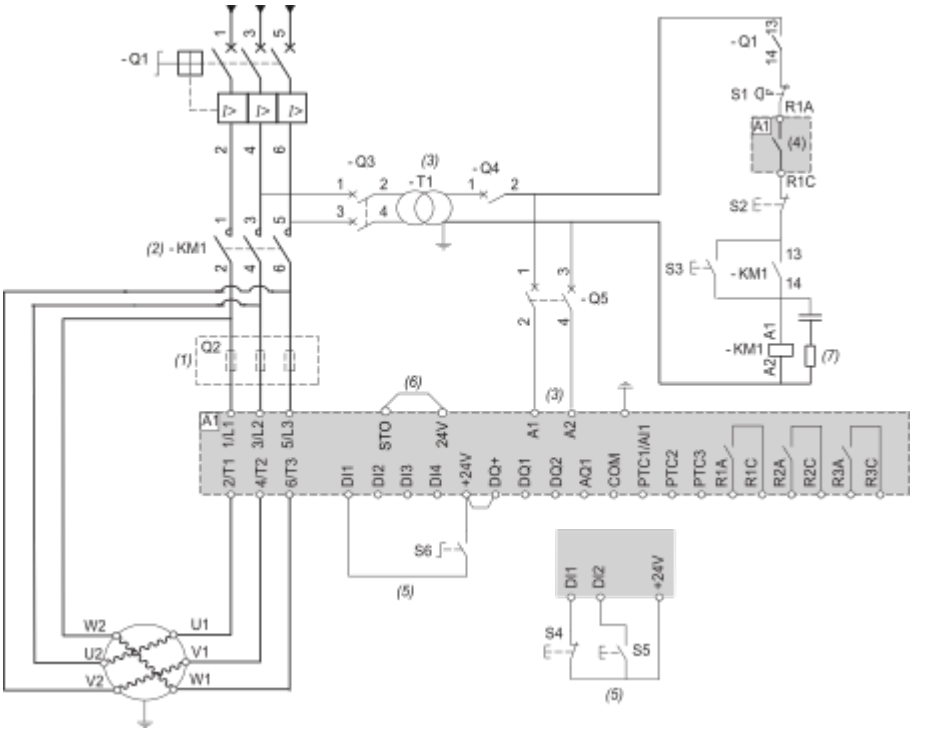

(1) : Installation of additional fast-acting fuses is mandatory to upgrade to type 2 coordination according to IEC 60947–4–2.
(2) : KM1 is mandatory to avoid uncontrolled voltage on the motor.
(3) : The transformer must supply 110...230 Vac +10% — 15%, 50/60Hz.
(4) : Take into account the electrical characteristics of the relays, especially when connecting to high rating contactor.
(5) : 3–wire control, 2–wire control.
(6) : STO Safe Torque Off.
(7) : Select the appropriate voltage surge suppressor.

Designation	Component	Description
Q1	Circuit breaker	Short circuit protection device for the motor
Q2	Fast acting fuses	Short circuit protection device of the soft starter to be used only when type 2 coordination according to IEC 60947-4-2 is required
Q3	Circuit breaker	Short circuit protection device for the primary of the transformer
Q4	Circuit breaker	Short circuit protection device for the secondary of the transformer
Q5	Circuit breaker	Short circuit protection device for the control part of the soft starter
KM1	Contactor	Line contactor
S1	Emergency Stop push-button	Emergency Stop to de-energized KM1 line contactor

S2	Normally close push-button	Power OFF
S3	Normally open push-button	Power ON
S4	Normally close contact push-button	STOP command for 3-wire control
S5	Normally open contact push-button	RUN command for 3-wire control
S6	Selector switch, 2 positions, stay–put, normally open contact	RUN/STOP. command for 2–wire control

Connection Inside the Delta, Type 1 or 2 Coordination, 2-wire or 3–wire

Line contactor controlled based on RUN and STOP command or detected error

Use relay output R1 set to [Mains Contactor]

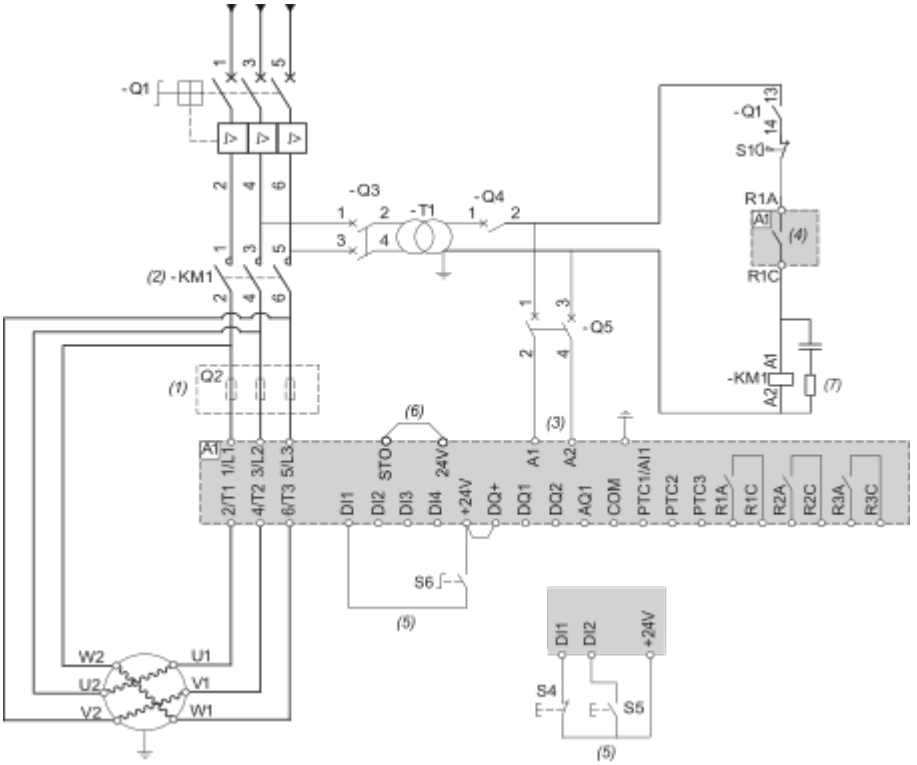

(1) : Installation of additional fast-acting fuses is mandatory to upgrade to type 2 coordination according to IEC 60947–4–2.
(2) : KM1 is mandatory to avoid uncontrolled voltage on the motor.
(3) : The transformer must supply 110...230 Vac +10% — 15%, 50/60Hz.
(4) : Take into account the electrical characteristics of the relays.
(5) : 3–wire control and 2–wire control.
(6) : STO Safe Torque Off.
(7) : Select the appropriate voltage surge suppressor.

Designation	Component	Description
Q1	Circuit breaker	Short circuit protection device for the motor
Q2	Circuit breaker	Short circuit protection device for the primary of the transformer

Q3	Fast acting fuses	Short circuit protection device of the soft starter to be used only when type 2 coordination
Q4	Circuit breaker	Short circuit protection device for the secondary of the transformer
Q5	Circuit breaker	Short circuit protection device for the control part of the soft starter
KM1	Contactor	Line contactor
S1	Emergency Stop push-button	Emergency Stop to de-energized KM1 line contactor
S4	Normally close contact push-button	STOP command for 3-wire control and power Off
S5	Normally open contact push-button	RUN command for 3-wire control and power On
S6	Selector switch, 2 positions, stay–put, normally open contact	RUN/STOP command for 2–wire control

Control Block Wiring Diagram

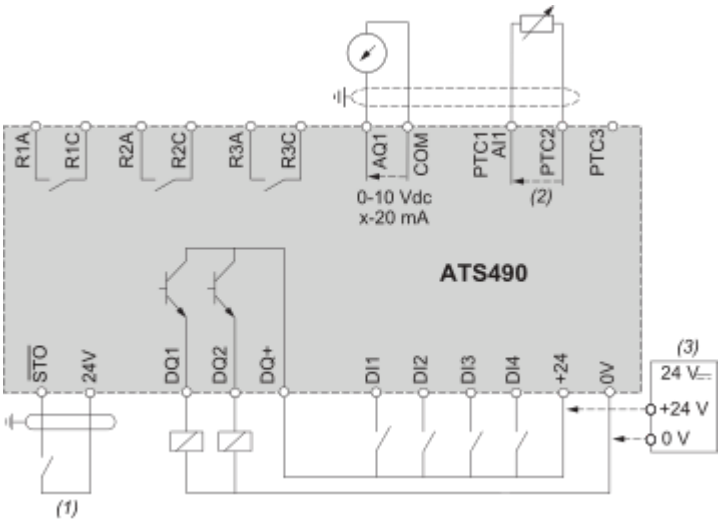

R1A, R1C, R2A, R2C, R3A, R3C : Programmable NO relays
DI1, DI2, DI3, DI4 : Digital inputs
AQ1 : Analogue output
PTC1/AI1, PTC2, PTC3 : Motor thermal sensor connection
DQ1, DQ2, DQ+ : Digital outputs
STO : Safety function STO input
(1) : STO Safe Torque Off
(2) : 2 wire PTC/PT100/PT1000/KTY
(3) : Optional, in case of +24 External Supply usage
PT100, PT1000 Thermal Probe 3 Wires :

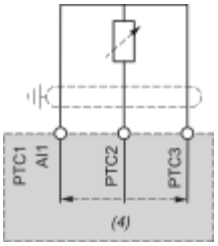

(4) : 3 wire PT100/PT1000

Technical Illustration

Dimensions

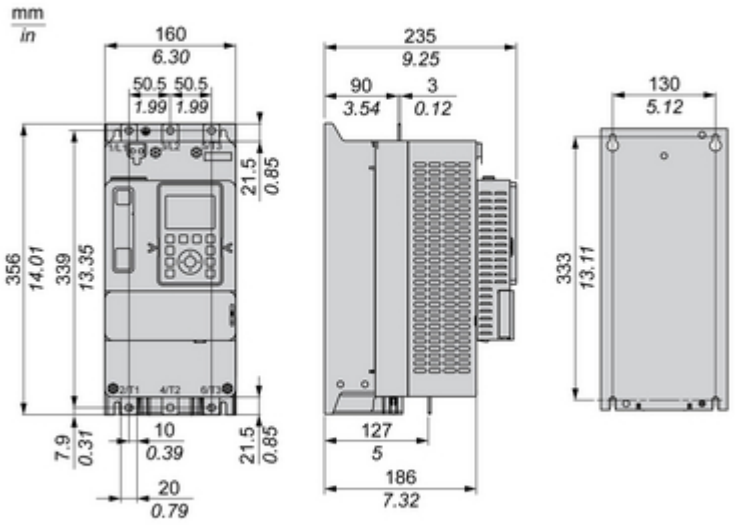

Technical Illustration

Wiring diagram

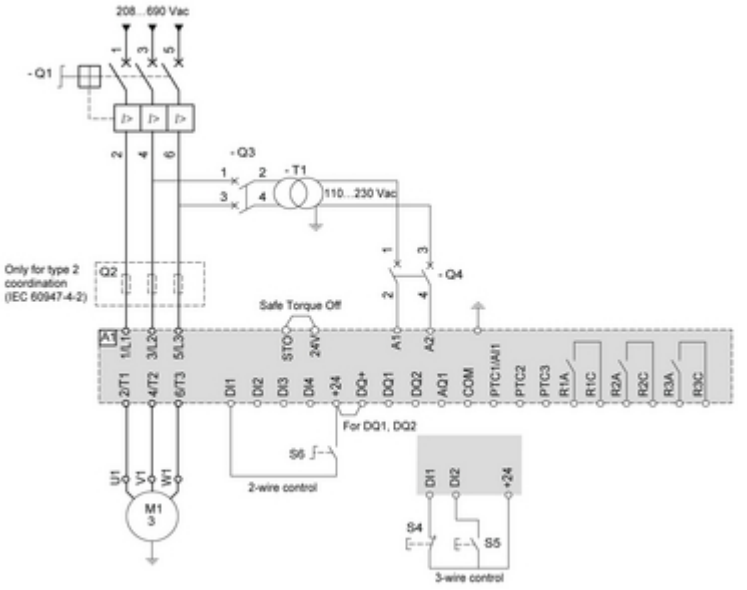

Image of product / Alternate images

Alternative








1/L1
3/L2
5/L3
2/T1
4/T2
6/T3

