Product data sheet

Specifications



Soft starter, Altivar Soft Starter ATS430, 75A, 208 to 600V AC, control supply 110 to 230V AC

ATS430D75S6

Product availability: Stock - Normally stocked in distribution facility

Main

Range of Product	Altivar Soft Starter ATS430
Product or Component Type	Soft starter
Product destination	Asynchronous motors
Product Specific Application	Standard industrial machines
Device short name	ATS430
Phase	3 phase
Utilisation category	AC-3A AC-53A
Ue power supply voltage	208...600 V AC - 15...10 %)
power supply frequency	50...60 Hz - 20...20 %
[Ie] rated operational current	Normal duty 75 A in line 104 °F (40 °C))
Service factor at Ie	100
Torque control	True
IP Degree of Protection	IP20
Motor power kW	18.5 kW 230 V in line normal duty 37 kW 400 V in line normal duty 37 kW 440 V in line normal duty 45 kW 500 V in line normal duty 45 kW 525 V in line normal duty
Maximum Horse Power Rating	20 hp 208 V normal duty 25 hp 230 V normal duty 50 hp 460 V normal duty 60 hp 575 V normal duty
Communication Port Protocol	Modbus serial

Complementary

Device connection	In line
Overload current	400 % Ie for 13 s
On-load factor	50 %
Operating cycles/hour	10 cyc/h
[Us] control circuit voltage	110...230 V AC 50-60 Hz - 15...10 %
Apparent power	70 VA
Integrated motor overload protection	True
motor thermal protection class	Class 10E

Price is “List Price” and may be subject to a trade discount – check with your local distributor or retailer for actual price.

Disclaimer: This documentation is not intended as a substitute for and is not to be used for determining suitability or reliability of these products for specific user applications

Protection type	Phase failure mains Thermal protection mains Thermal protection starter Current overload motor Motor underload motor Excessive acceleration time motor Motor phase loss detection motor Protection against line phase inversion mains External thermal protection motor Short-circuit between motor phase and earth motor
current limiting %In (5 x Ie maximum)	150…700 %
[In] Rated current pwr loss specifctn	75 A
Power loss static current independent	19 W
Power loss per device current dependent	8 W
Power loss during starting	640 W during starting at 40 °C at 400% In
Standards	EN/IEC 60947-4-2 UL 60947-4-2 IEC 60664-1
Product Certifications	cULus CE UKCA CCC RCM EAC KC
Marking	CULus CE UKCA CCC RCM EAC KC
[Uc] control circuit voltage	24 V DC
Discrete input number	4
Discrete input type	STOP) digital input, 4.4 kOhm RUN) digital input, 4.4 kOhm DI3) digital input, 4.4 kOhm DI4) digital input, 4.4 kOhm
Input compatibility	STOP digital input level 1 PLC EN/IEC 61131-2 RUN digital input level 1 PLC EN/IEC 61131-2 DI3 digital input level 1 PLC EN/IEC 61131-2 DI4 digital input level 1 PLC EN/IEC 61131-2
Discrete input logic	Digital input STOP 0...< 5 V <= 2 mA > 11 V, >= 5 mA Digital input RUN 0...< 5 V <= 2 mA > 11 V, >= 5 mA Digital input DI3 0...< 5 V <= 2 mA > 11 V, >= 5 mA Digital input DI4 0...< 5 V <= 2 mA > 11 V, >= 5 mA
Relay output number	2
Relay output type	Relay outputs R1A, R1C NO Relay outputs R1B, R1C NC Relay outputs R2A, R2C NO
Minimum switching current	100 mA 12 V DC relay outputs
Maximum switching current	Relay outputs 2 A / 250 V AC for AC-15 100000 cycles following IEC 60947-5-1 Relay outputs 2 A / 30 V DC for DC-13 150000 cycles following IEC 60947-5-1
Analogue input number	1
Analogue input type	PTC1 : PTC temperature probe PTC2 : PTC temperature probe
Analogue output number	1

Analogue output type	Current output AQ1 : 0...20 mA/4...20 mA , impedance< 500 Ohm Voltage output AQ1 : 0...10 V , impedance> 470 Ohm
Communication port protocol	Modbus serial RJ45 Modbus serial open style (DO, D1, PE, COM)
Connector Type	1 RJ45 Open style
Physical interface	2-wire RS 485 RJ45 2-wire RS 485 open style (DO, D1, PE, COM)
Transmission frame	RTU : 1 RJ45 RTU : open style (DO, D1, PE, COM)
Transmission rate	4.8…38.4 kbps for Modbus serial RJ45 0.3...115.2 kbps for Modbus serial open style (DO, D1, PE, COM)
Data format	8 bits, odd, even or no parity, 1 or 2 bits to stop for Modbus serial RJ45 8 bits, configurable odd, even or no parity for Modbus serial open style (DO, D1, PE, COM)
Number of addresses	0…247 Modbus serial
Method of access	Slave Modbus serial
Type of polarization	No impedance Modbus serial
Display screen available	True
Operating position	Vertical +/- 10 degree
Height	11.1 in (283 mm)
Width	6.3 in (160 mm)
Depth	9.06 in (230.2 mm)
Product Weight	14.55 lb(US) (6.60 kg)
internal bypass	True
Function Available	Single direction Pre-heating Power monitoring Condition monitoring User management Ports and services hardening Security event logging Cybersecure firmware update Small motor test
material declaration	True

Environment

Electromagnetic compatibility	Conducted and radiated emissions level A conforming to IEC 60947-4-2 Electrostatic discharge level 3 conforming to IEC 61000-4-2 Immunity to radiated radio-electrical interference level 3 conforming to IEC 61000-4-3 Immunity to electrical transients level 4 conforming to IEC 61000-4-4 Voltage/current impulse level 3 conforming to IEC 61000-4-5 Damped oscillating waves level 3 conforming to IEC 61000-4-18 Immunity to conducted disturbances radio-frequency level 3 conforming to IEC 61000-4-6
Pollution degree	Level 3
[Uimp] rated impulse withstand voltage	6 kV
[Ui] Rated Insulation Voltage	600 V
Environmental class (during operation)	Class 3C3 according to IEC 60721-3-3 Class 3S3 according to IEC 60721-3-3
Ambient air temperature for operation	-13…104 °F (-25…40 °C) (without derating) 104…140 °F (40…60 °C) (with current derating of 1 % per °C above 40 °C)
Ambient Air Temperature for Storage	-40…158 °F (-40…70 °C)

Ambient air transport temperature	-40…158 °F (-40…70 °C)
Operating altitude	<= 6561.68 ft (2000 m) without derating > 2000...4800 m with current derating 1 % per 100 m above 2000 m
Relative humidity	5…95 % without condensation or dripping water EN/IEC 60068-2-3
Maximum deflection under vibratory load (during operation)	1.5 mm at 2...13 Hz
Maximum deflection under vibratory load (during storage)	1.75 mm at 2...9 Hz
Maximum deflection under vibratory load (during transport)	1.75 mm at 2...9 Hz
Maximum acceleration under vibrational stress (during operation)	1 gn at 13…200 Hz
Maximum acceleration under vibratory load (during storage)	1 gn at 9…200 Hz 1.5 gn at 200…500 Hz
Maximum acceleration under vibratory load (during transport)	1 gn at 9…200 Hz 1.5 gn at 200…500 Hz
Maximum acceleration under shock impact (during operation)	15 gn at 11 ms
Maximum acceleration under shock load (during storage)	10 gn at 11 ms
Maximum acceleration under shock load (during transport)	10 gn at 11 ms

Ordering and shipping details

Category	US1CP1G22588
Discount Schedule	CP1G
GTIN	3606486948644
Returnability	Yes
Country of origin	ID

Packing Units

Unit Type of Package 1	PCE
Nbr. of units in pkg.	1
Package 1 Height	10.827 in (27.500 cm)
Package 1 Width	9.252 in (23.500 cm)
Package 1 Length	14.173 in (36.000 cm)
Package weight(Lbs)	16.471 lb(US) (7.471 kg)
Unit Type of Package 2	S06
Number of Units in Package 2	8
Package 2 Height	29.528 in (75.000 cm)
Package 2 Width	23.622 in (60.000 cm)
Package 2 Length	31.496 in (80.000 cm)
Package 2 Weight	155.426 lb(US) (70.500 kg)

Contractual warranty

Warranty (in months)	18

Environmental Data

Schneider Electric aims to achieve Net Zero status by 2050 through supply chain partnerships, lower impact materials, and circularity via our ongoing “Use Better, Use Longer, Use Again” campaign to extend product lifetimes and recyclability.

Environmental Data explained >

How we assess product sustainability >

Environmental footprint

Total lifecycle Carbon footprint	**2 802 kg CO2 eq.**
Carbon footprint of the manufacturing phase [A1 to A3]	**164 kg CO2 eq.**
Carbon footprint of the distribution phase [A4]	**1 kg CO2 eq.**
Carbon footprint of the installation phase [A5]	**1 kg CO2 eq.**
Carbon footprint of the use phase [B2, B3, B4, B6]	**2 621 kg CO2 eq.**
Carbon footprint of the end-of-life phase [C1 to C4]	**14 kg CO2 eq.**
Environmental Disclosure	Product Environmental Profile

Use Better

Materials and Substances

Packaging made with recycled cardboard	**No**
Packaging without single use plastic	**No**
SCIP Number	**79343e97-efb7-4e3f-8849-0018eb0308a8**
EU RoHS Directive	Compliant By Exemption
REACh Regulation	Reference contains Substances of Very High Concern above the threshold
California proposition 65	**WARNING: This product can expose you to chemicals including: Lead and lead compounds, which is known to the State of California to cause cancer and birth defects or other reproductive harm. For more information go to www.P65Warnings.ca.gov**

Use Longer

Lifetime extension

Repair	**No**

Use Again

Repack and remanufacture

Circularity Profile	End of Life Information
Removable battery	**Yes**
Take-back	**No**
WEEE Label	**The product must be disposed on European Union markets following specific waste collection and never end up in rubbish bins.**

Dimensions Drawings

Dimensions

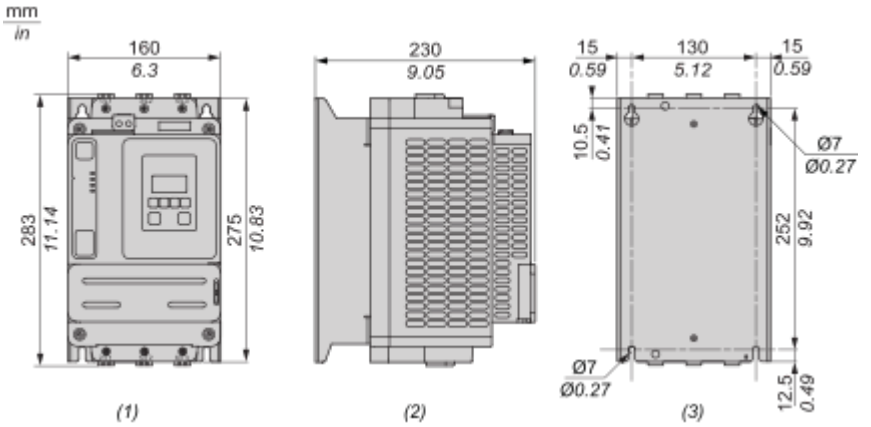

(1) : Front
(2) : Side
(3) : Rear

Mounting and Clearance

Mounting Position

The soft starter is designed to be mounted inside cabinets vertically at ± 10° for cooling purposes.Respect the minimum clearances so that the cooling air can circulate from the bottom to the top of the soft starter. The minimum clearances apply to any device close to the soft starter such as circuit breakers, fuses and contactors.Do not install the soft starter above heating elements.

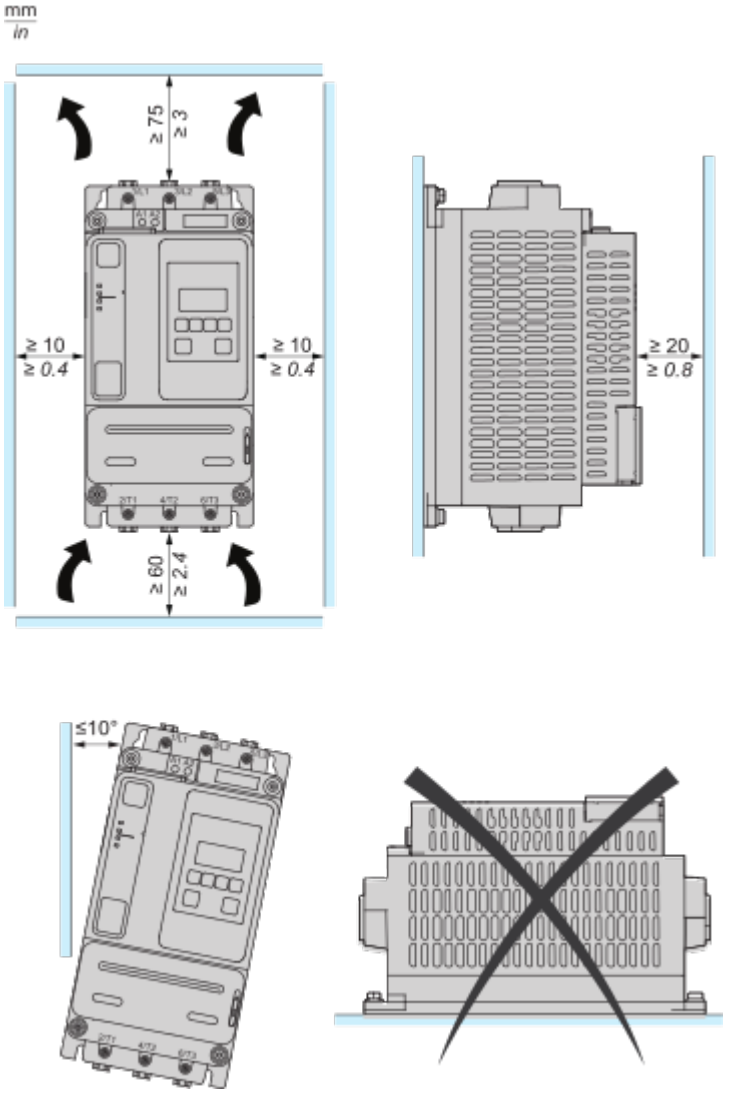

Connections and Schema

Wiring

Wiring the Power Part

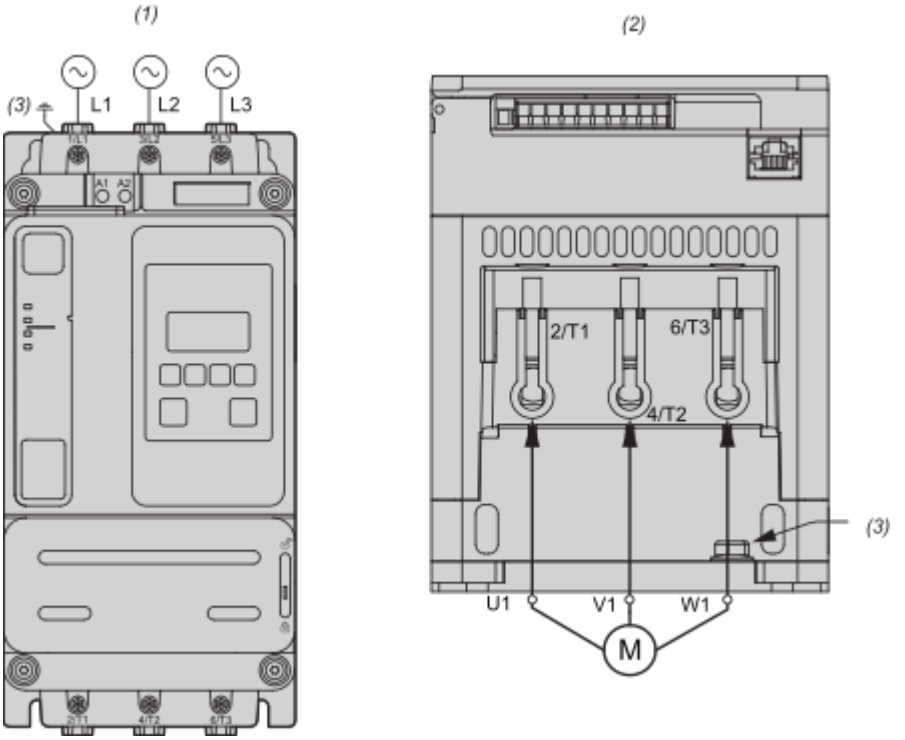

Use class C cables for the power connections.
1/L1, 3/L2, 5/L3 : Mains supply inputs
2/T1, 4/T2, 6/T3 : Outputs to motor
(1) : Mains side
(2) : Motor side (bottom)
(3) : Ground connection

Connection In Line, With Line Contactor, Type 1 or 2 Coordination, 2-wire control or 3–wire control

Line contactor controlled based on RUN & STOP or on detected error.
Use relay output R1 set to **[Mains Contactor]**

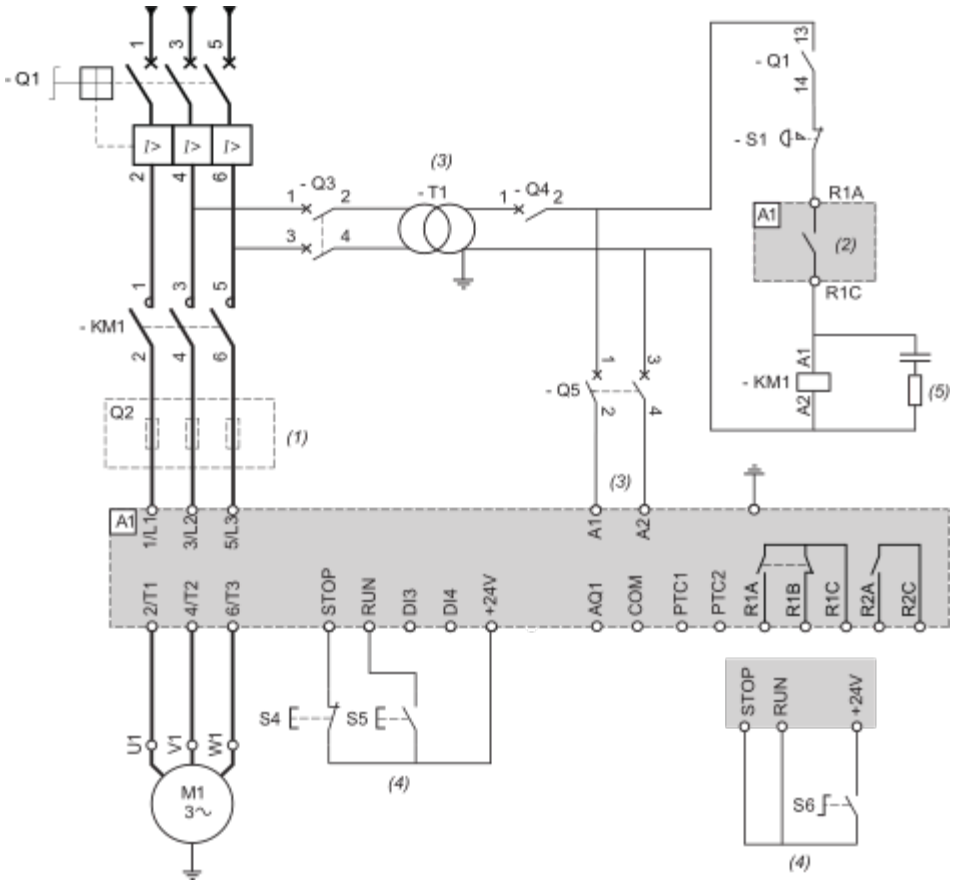

(1) : Installation of additional fast-acting fuses is mandatory to upgrade to type 2 coordination according to IEC 60947–4–2.
(2) : Take into account the electrical characteristics of the relays.
(3) : The transformer must supply 110...230 Vac –15%...+10%, 50/60Hz.
(4) : 3–wire control or 2–wire control.
(5) : Select the appropriate voltage surge suppressor.

Designation	Component	Description
Q1	Circuit breaker	Short circuit protection device for the motor
Q2	Circuit breaker	Short circuit protection device for the primary of the transformer
Q3	Fast acting fuses	Short circuit protection device of the soft starter to be used only when type 2 coordination according to IEC 60947-4-2 is required
Q4	Circuit breaker	Short circuit protection device for the secondary of the transformer
Q5	Circuit breaker	Short circuit protection device for the control part of the soft starter
KM1	Contactor	Line contactor
S1	Emergency Stop push-button	Emergency Stop to de-energized KM1 line contactor
S4	Normally close contact push-button	STOP command for 3-wire control
S5	Normally open contact push-button	RUN command for 3-wire control

S6	Selector switch, 2 positions, stay–put, normally open contact	RUN/STOP. command for 2–wire control

Connection In Line, With Line Contactor, Type 1 or 2 Coordination, 2-wire or 3-wire

Line contactor controlled by Power ON and Power OFF push-buttons or detected error.
Use relay output R1 set to **[Operating State Fault]** (factory setting)

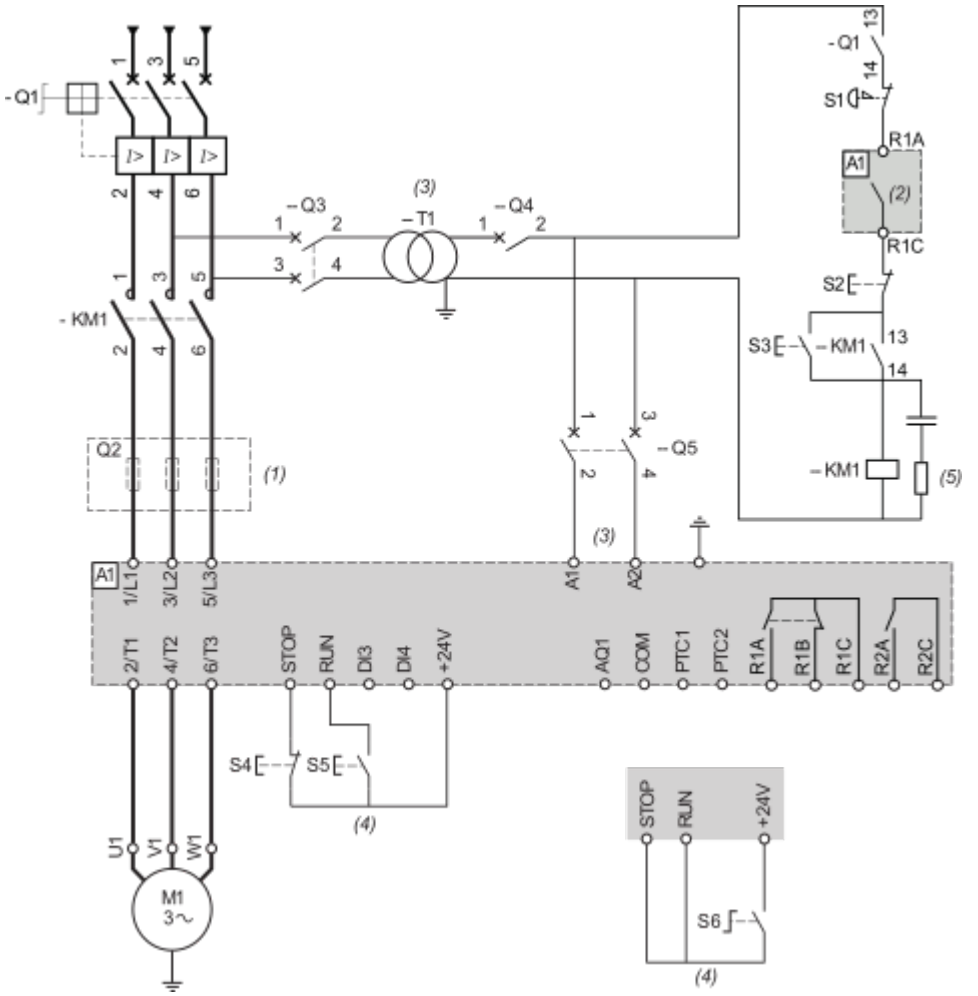

(1) : Installation of additional fast-acting fuses is mandatory to upgrade to type 2 coordination according to IEC 60947–4–2.
(2) : Take into account the electrical characteristics of the relays.
(3) : The transformer must supply 110...230 Vac –15%...+10%, 50/60Hz.
(4) : 3–wire control and 2–wire control.
(5) : Select the appropriate voltage surge suppressor.

Designation	Component	Description
Q1	Circuit breaker	Short circuit protection device for the motor
Q2	Circuit breaker	Short circuit protection device for the primary of the transformer
Q3	Fast acting fuses	Short circuit protection device of the soft starter to be used only when type 2 coordination
Q4	Circuit breaker	Short circuit protection device for the secondary of the transformer

Q5	Circuit breaker	Short circuit protection device for the control part of the soft starter
KM1	Contactor	Line contactor
S1	Emergency Stop push-button	Emergency Stop to de-energized KM1 line contactor
S2	Normally close push-button	Power OFF
S3	Normally open push-button	Power ON
S4	Normally close contact push-button	STOP command for 3-wire control
S5	Normally open contact push-button	RUN command for 3-wire control
S6	Selector switch, 2 positions, stay–put, normally open contact	RUN/STOP command for 2-wire control

Control Block Wiring Diagram

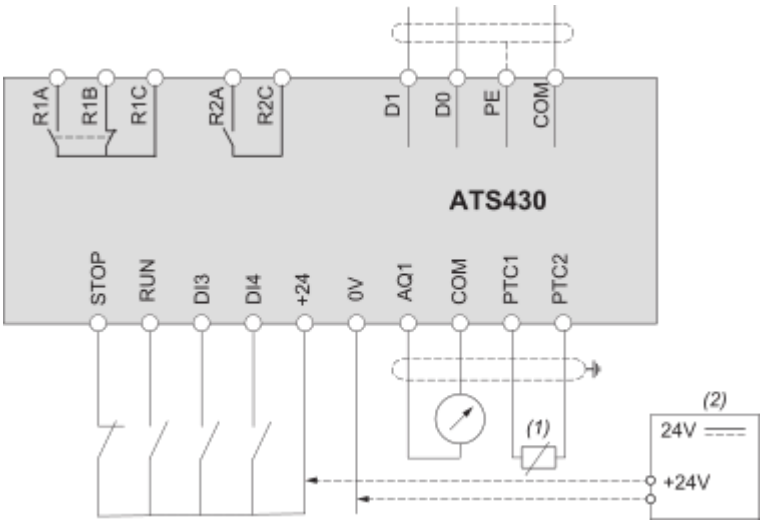

R1A, R1B, R1C : Programmable relay R1
R2A, R2C : Relay assigned to End of starting
STOP, RUN, DI3, DI4 : Digital inputs
AQ1: Analogue output
PTC1, PTC2 : PTC connection
D0, D1 : Serial link based on 2-wire Modbus over serial line electrical interface
(1) : 2 wire PTC
(2) : Optional, in case of +24 External Supply usage

Technical Illustration

Dimensions

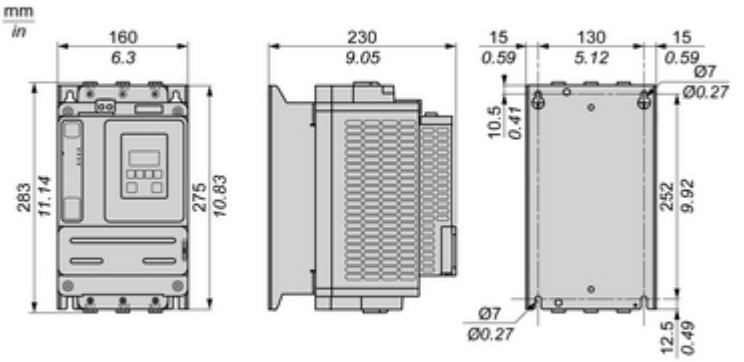

Technical Illustration

Wiring diagram

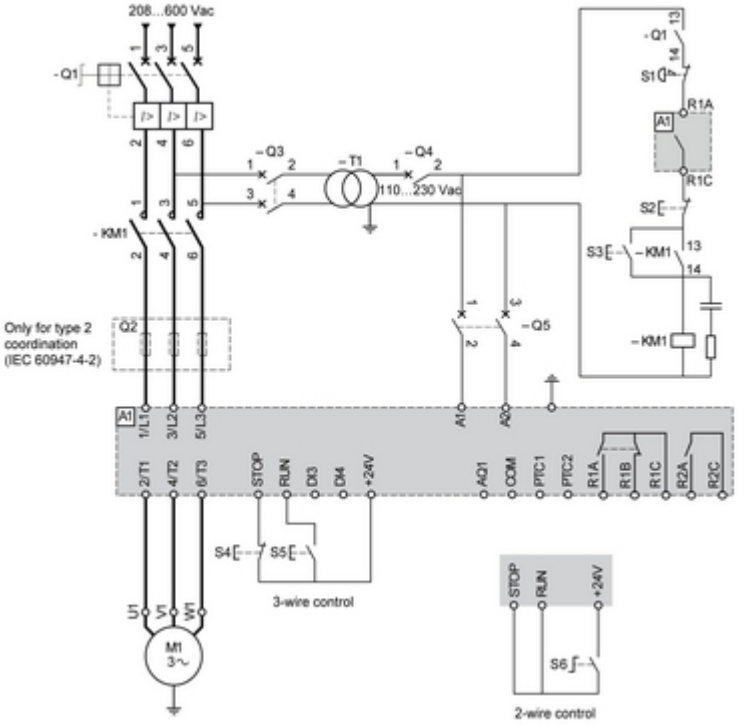

Image of product / Alternate images

Alternative











