Product data sheet

Specifications

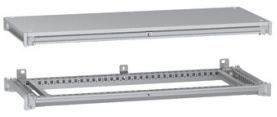

Bottom and top frame, PanelSeT SFN, for electrical enclosure W1000 D400mm, roof included

NSYSFNC104

Product availability: Stock - Normally stocked in distribution facility

Main

Range	PanelSeT
Accessory / separate part category	Enclosure accessory
Application	Multi-purpose
Product or Component Type	Framework kit
For enclosure nominal dimensions	- W: 39.4 in (1000 mm) D: 15.7 in (400 mm)
Mounting Location	Top of vertical uprights Bottom of vertical uprights
Range compatibility	PanelSeT SFN
Device composition	1 bottom frame 1 roof 1 top frame
Quantity per Set	Set of 1

Complementary

Material	steel
color	Gray RAL 7035)
Surface Finish	Epoxy-polyester powder
Fixing mode	By screws - each corner of enclosure
Height	4.3 in (110 mm)
Width	39.4 in (1000 mm)
Depth	15.7 in (400 mm)

Ordering and shipping details

Category	US10ES180036
Discount Schedule	0ES1
GTIN	3606486104088
Returnability	Yes
Country of origin	ES

Packing Units

Unit Type of Package 1	PCE
Nbr. of units in pkg.	1
Package 1 Height	5.512 in (14.000 cm)

Price is “List Price” and may be subject to a trade discount – check with your local distributor or retailer for actual price.

Disclaimer: This documentation is not intended as a substitute for and is not to be used for determining suitability or reliability of these products for specific user applications

Package 1 Width	16.535 in (42.000 cm)
Package 1 Length	40.157 in (102.000 cm)
Package weight(Lbs)	38.581 lb(US) (17.500 kg)
Unit Type of Package 2	PAM
Number of Units in Package 2	16
Package 2 Height	48.031 in (122.000 cm)
Package 2 Width	39.370 in (100.000 cm)
Package 2 Length	47.244 in (120.000 cm)
Package 2 Weight	641.546 lb(US) (291.000 kg)

Contractual warranty

Warranty (in months)	18

Environmental Data

Schneider Electric aims to achieve Net Zero status by 2050 through supply chain partnerships, lower impact materials, and circularity via our ongoing “Use Better, Use Longer, Use Again” campaign to extend product lifetimes and recyclability.

Environmental Data explained >

How we assess product sustainability >

Environmental footprint

Total lifecycle Carbon footprint	**86 kg CO2 eq.**
Carbon footprint of the manufacturing phase [A1 to A3]	**42 kg CO2 eq.**
Carbon footprint of the distribution phase [A4]	**3 kg CO2 eq.**
Carbon footprint of the installation phase [A5]	**4 kg CO2 eq.**
Carbon footprint of the use phase [B2, B3, B4, B6]	**0 kg CO2 eq.**
Carbon footprint of the end-of-life phase [C1 to C4]	**37 kg CO2 eq.**
Environmental Disclosure	Product Environmental Profile

Use Better

Materials and Substances

Packaging made with recycled cardboard	**No**
Packaging without single use plastic	**No**
SCIP Number	**695ecfbd-bb51-4da6-80d3-6b38e7bcfee6**
EU RoHS Directive	Compliant By Exemption
REACh Regulation	Reference contains Substances of Very High Concern above the threshold
California proposition 65	**WARNING: This product can expose you to chemicals including: Lead, which is known to the State of California to cause cancer and birth defects or other reproductive harm. For more information go to www.P65Warnings.ca.gov**
PVC free	**Yes**
Silicon free	**Yes**

Use Longer

Lifetime extension

Repair	**No**

Use Again

Repack and remanufacture

Recyclability potential, in %	**97**
Circularity Profile	End of Life Information
Take-back	**No**

Technical Illustration

Dimensions

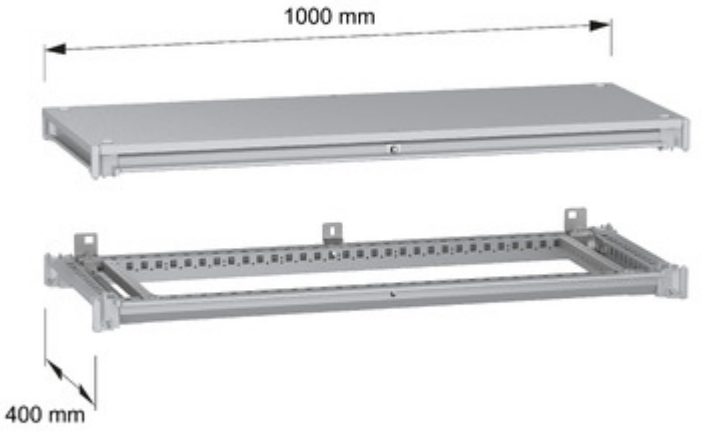

Technical Illustration

Exploded view



Image of product / Alternate images

Alternative

