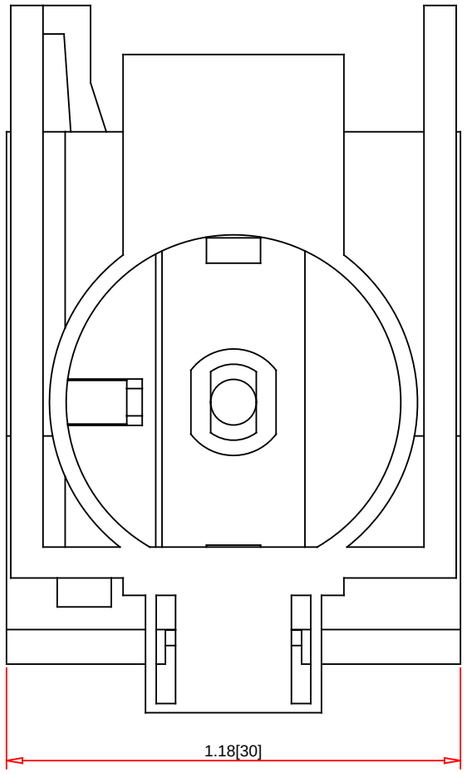

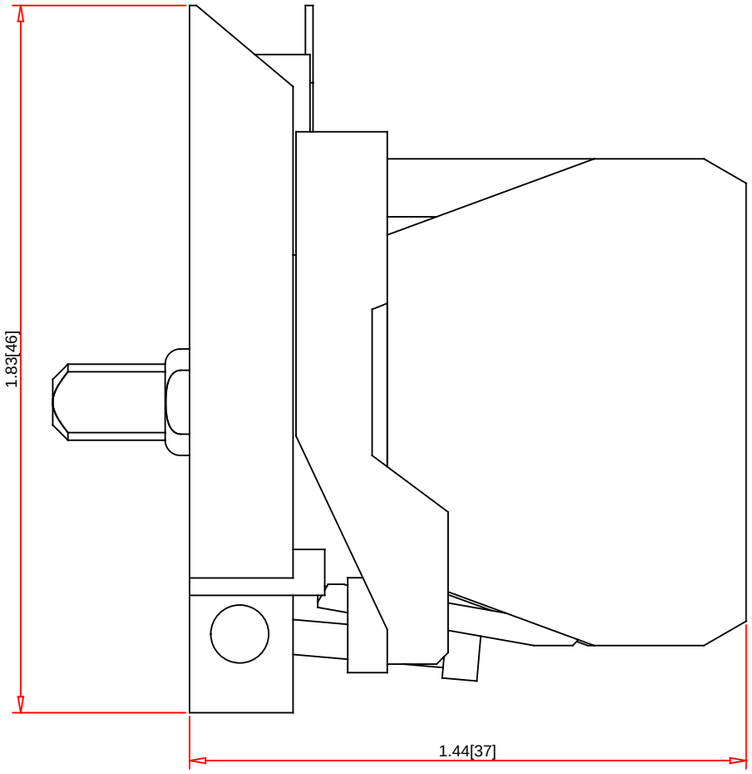

Note:
- Drawings Not To Scale
- Drawings Subject to Change Without Notice
- Dimensions are inches next to [Millimeters]

Part No.:

ZB4BW0B62

Schneider Electric United States
North American Division
Boston One Campus
800 Federal Street
Andover, MA 01810, USA
Phone:+1 8773425173
Email: CCC@us.schneider-electric.com

Technical Information:

Tightening Torque:	0.8 Nm
Light Module Electrical Consumption:	24V = 18mA; 120/240V = 14mA
CE:	Yes
RoHS:	Yes
Contact Configuration:	1 N.C.
Light Module Supply Voltage:	n/a

Specification:

Description:	Base, Contact, & Light Module
Light Module Type:	LED (Blue)
Light Module Voltage:	24Vac/dc
Ampere Rating:	10A
Contact Material:	Silver Alloy
Terminal Type:	Screw Clamp
Utilization Category:	AC-15; DC-13
Used On:	ZB4 Metal Operators