# Product data sheet
## Characteristics

# ATV71HD30N4Z
## variable speed drive ATV71 - 30kW-40HP - 480V - EMC filter-w/o graphic terminal



## Main

| | |
|---|---|
| Range of product | Altivar 71 |
| Product or component type | Variable speed drive |
| Product specific application | Complex, high-power machines |
| Component name | ATV71 |
| Motor power kW | 30 kW, 3 phase 380...480 V |
| Maximum Horse Power Rating | 40 hp, 3 phase 380...480 V |
| Maximum motor cable length | 328.08 Ft (100 m) shielded cable<br>656.17 ft (200 m) unshielded cable |
| Power supply voltage | 380...480 V - 15...10 % |
| Phase | 3 phase |
| Line current | 56 A 480 V 3 phase 30 kW / 40 hp<br>66 A 380 V 3 phase 30 kW / 40 hp |
| EMC filter | Integrated |
| Assembly style | With heat sink |
| Variant | Without remote graphic terminal |
| Apparent power | 43.4 kVA 380 V 3 phase 30 kW / 40 hp |
| Prospective line Isc | 22 kA 3 phase |
| Nominal output current | 52 A 4 kHz 460 V 3 phase 30 kW / 40 hp<br>66 A 4 kHz 380 V 3 phase 30 kW / 40 hp |
| Maximum transient current | 109 A 2 s 3 phase 30 kW / 40 hp<br>99 A 60 s 3 phase 30 kW / 40 hp |
| Output frequency | 0.1…599 Hz |
| Nominal switching frequency | 4 kHz |
| Switching frequency | 1...16 kHz adjustable<br>4...16 kHz with derating factor |
| Asynchronous motor control profile | Sensorless flux vector control (SFVC) (voltage or current vector)<br>ENA (Energy adaptation) system for unbalanced loads<br>Voltage/Frequency ratio (2 or 5 points)<br>Flux vector control (FVC) with sensor (current vector) |
| Type of polarization | No impedance Modbus |

## Complementary

| | |
|---|---|
| Product destination | Asynchronous motors<br>Synchronous motors |
| Power supply voltage limits | 323…528 V |
| Power supply frequency | 50...60 Hz - 5...5 % |
| Power supply frequency limits | 47.5...63 Hz |
| Speed range | 1…100 asynchronous motor in open-loop mode, without speed feedback<br>1…1000 asynchronous motor in closed-loop mode with encoder feedback<br>1…50 synchronous motor in open-loop mode, without speed feedback |
| Speed accuracy | +/- 0.01 % of nominal speed in closed-loop mode with encoder feedback 0.2 Tn to Tn<br>+/- 10 % of nominal slip without speed feedback 0.2 Tn to Tn |
| Torque accuracy | +/- 15 % in open-loop mode, without speed feedback<br>+/- 5 % in closed-loop mode with encoder feedback |
| Transient overtorque | 170 % +/- 10 % 60 s every 10 minutes<br>220 % +/- 10 % 2 s |

The information provided in this documentation contains general descriptions and/or technical characteristics of the performance of the products contained herein.
This documentation is not intended as a substitute for and is not to be used for determining suitability or reliability of these products for specific user applications.
It is the duty of any such user or integrator to perform the appropriate and complete risk analysis, evaluation and testing of the products with respect to the relevant specific application or use thereof.
Neither Schneider Electric Industries SAS nor any of its affiliates or subsidiaries shall be responsible or liable for misuse of the information contained herein.

| | |
|---|---|
| Braking torque | <= 150 % with braking or hoist resistor<br>30 % without braking resistor |
| Synchronous motor control profile | Vector control without speed feedback |
| Regulation loop | Adjustable PI regulator |
| Motor slip compensation | Adjustable<br>Automatic whatever the load<br>Not available in voltage/frequency ratio (2 or 5 points)<br>Suppressable |
| Diagnostic | Drive voltage 1 LED red) |
| Output voltage | <= power supply voltage |
| Insulation | Electrical between power and control |
| Type of cable for mounting in an enclosure | With a NEMA Type1 kit 3 UL 508 cable 104 °F (40 °C), copper 75 °C / PVC<br>With an IP21 or an IP31 kit 3 IEC cable 104 °F (40 °C), copper 70 °C / PVC<br>Without mounting kit 1 IEC cable 113 °F (45 °C), copper 70 °C / PVC<br>Without mounting kit 1 IEC cable 113 °F (45 °C), copper 90 °C / XLPE/EPR |
| Electrical connection | Terminal 2.5 mm², AWG 14 AI1-/AI1+, AI2, AO1, R1A, R1B, R1C, R2A, R2B, LI1...LI6, PWR)<br>Terminal 50 mm², AWG 1/0 L1/R, L2/S, L3/T, U/T1, V/T2, W/T3, PC/-, PO, PA/+, PA, PB) |
| Tightening torque | 5.31 Lbf.In (0.6 N.m) AI1-/AI1+, AI2, AO1, R1A, R1B, R1C, R2A, R2B, LI1...LI6, PWR)<br>106.21 lbf.in (12 N.m), 102.2 lb.in L1/R, L2/S, L3/T, U/T1, V/T2, W/T3, PC/-, PO, PA/+, PA, PB) |
| Supply | Internal supply for reference potentiometer (1 to 10 kOhm) 10.5 V DC +/- 5 %, <10 mA overload and short-circuit protection<br>Internal supply 24 V DC 21…27 V), <200 mA overload and short-circuit protection |
| Analogue input number | 2 |
| Analogue input type | AI1-/AI1+ bipolar differential voltage +/- 10 V DC 24 V max 11 bits + sign<br>AI2 software-configurable current 0...20 mA 242 Ohm 11 bits<br>AI2 software-configurable voltage 0...10 V DC 24 V max 30000 Ohm 11 bits |
| Input sampling time | 2 Ms +/- 0.5 ms AI1-/AI1+) - analog<br>2 Ms +/- 0.5 ms AI2) - analog<br>2 Ms +/- 0.5 ms LI1...LI5) - discrete<br>2 ms +/- 0.5 ms LI6)if configured as logic input - discrete |
| Response time | <= 100 ms in STO (Safe Torque Off)<br>AO1 2 ms +/- 0.5 ms analog<br>R1A, R1B, R1C 7 ms +/- 0.5 ms discrete<br>R2A, R2B 7 ms +/- 0.5 ms discrete |
| Absolute accuracy precision | +/- 0.6 % AI1-/AI1+) for a temperature variation 60 °C<br>+/- 0.6 % AI2) for a temperature variation 60 °C<br>+/- 1 % AO1) for a temperature variation 60 °C |
| Linearity error | +/- 0.15 % of maximum value AI1-/AI1+, AI2)<br>+/- 0.2 % AO1) |
| Analogue output number | 1 |
| Analogue output type | AO1 software-configurable logic output 10 V 20 mA<br>AO1 software-configurable current 0...20 mA 500 Ohm 10 bits<br>AO1 software-configurable voltage 0...10 V DC 470 Ohm 10 bits |
| Discrete output number | 2 |
| Discrete output type | Configurable relay logic R1A, R1B, R1C) NO/NC - 100000 cycles<br>Configurable relay logic R2A, R2B) NO - 100000 cycles |
| Minimum switching current | 3 mA 24 V DC configurable relay logic |
| Maximum switching current | R1, R2 2 A 250 V AC inductive, cos phi = 0.4<br>R1, R2 2 A 30 V DC inductive, cos phi = 0.4<br>R1, R2 5 A 250 V AC resistive, cos phi = 1<br>R1, R2 5 A 30 V DC resistive, cos phi = 1 |
| Discrete input number | 7 |
| Discrete input type | LI1...LI5 programmable 24 V DC level 1 PLC 3500 Ohm<br>LI6 switch-configurable 24 V DC level 1 PLC 3500 Ohm<br>LI6 switch-configurable PTC probe 0…6 1500 Ohm<br>PWR safety input 24 V DC 1500 Ohm ISO 13849-1 level d |
| Discrete input logic | Negative logic (sink) LI1...LI5), > 16 V, < 10 V<br>Positive logic (source) LI1...LI5), < 5 V, > 11 V<br>Negative logic (sink) LI6)if configured as logic input, > 16 V, < 10 V<br>Positive logic (source) LI6)if configured as logic input, < 5 V, > 11 V |
| Acceleration and deceleration ramps | Automatic adaptation of ramp if braking capacity exceeded, by using resistor<br>Linear adjustable separately from 0.01 to 9000 s<br>S, U or customized |
| Braking to standstill | By DC injection |

| | |
|---|---|
| Protection type | Against exceeding limit speed drive<br>Against input phase loss drive<br>Break on the control circuit drive<br>Input phase breaks drive<br>Line supply overvoltage drive<br>Line supply undervoltage drive<br>Overcurrent between output phases and earth drive<br>Overheating protection drive<br>Overvoltages on the DC bus drive<br>Short-circuit between motor phases drive<br>Thermal protection drive<br>Motor phase break motor<br>Power removal motor<br>Thermal protection motor |
| Insulation resistance | > 1 mOhm 500 V DC for 1 minute to earth |
| Frequency resolution | Analog input 0.024/50 Hz<br>Display unit 0.1 Hz |
| Communication port protocol | Modbus<br>CANopen |
| Connector type | 1 RJ45 on front face)Modbus<br>1 RJ45 on terminal)Modbus<br>Male SUB-D 9 on RJ45CANopen |
| Physical interface | 2-wire RS 485 Modbus |
| Transmission frame | RTU Modbus |
| Transmission rate | 4800 bps, 9600 bps, 19200 bps, 38.4 Kbps Modbus on terminal<br>9600 bps, 19200 bps Modbus on front face<br>20 kbps, 50 kbps, 125 kbps, 250 kbps, 500 kbps, 1 Mbps CANopen |
| Data format | 8 bits, 1 stop, even parity Modbus on front face<br>8 bits, odd even or no configurable parity Modbus on terminal |
| Number of addresses | 1…127 CANopen<br>1…247 Modbus |
| Method of access | Slave CANopen |
| Marking | CE |
| Operating position | Vertical +/- 10 degree |
| Maximum Height | 21.65 in (550 mm) |
| Maximum Depth | 10.47 in (266 mm) |
| Maximum Width | 9.45 in (240 mm) |
| Net Weight | 81.57 lb(US) (37 kg) |
| Option card | Communication card CC-Link<br>Controller inside programmable card<br>Communication card DeviceNet<br>Communication card Ethernet/IP<br>Communication card Fipio<br>I/O extension card<br>Communication card Interbus-S<br>Interface card for encoder<br>Communication card Modbus Plus<br>Communication card Modbus TCP<br>Communication card Modbus/Uni-Telway<br>Overhead crane card<br>Communication card Profibus DP<br>Communication card Profibus DP V1 |

## Environment

| | |
|---|---|
| Noise level | 64 dB 86/188/EEC |
| Dielectric strength | 3535 V DC between earth and power terminals<br>5092 V DC between control and power terminals |
| Electromagnetic compatibility | 1.2/50 µs - 8/20 µs surge immunity test level 3 IEC 61000-4-5<br>Conducted radio-frequency immunity test level 3 IEC 61000-4-6<br>Electrical fast transient/burst immunity test level 4 IEC 61000-4-4<br>Electrostatic discharge immunity test level 3 IEC 61000-4-2<br>Radiated radio-frequency electromagnetic field immunity test level 3 IEC 61000-4-3<br>Voltage dips and interruptions immunity test IEC 61000-4-11 |
| Standards | EN/IEC 61800-5-1<br>EN 55011 class A group 2<br>IEC 60721-3-3 class 3S2<br>EN 61800-3 environments 2 category C3<br>UL Type 1<br>EN 61800-3 environments 1 category C3<br>IEC 60721-3-3 class 3C1<br>EN/IEC 61800-3 |
| Product certifications | NOM 117<br>UL<br>C-tick<br>CSA |
| Pollution degree | 2 EN/IEC 61800-5-1<br>3 UL 840 |
| IP degree of protection | IP20 on upper part without blanking plate on cover EN/IEC 60529<br>IP20 on upper part without blanking plate on cover EN/IEC 61800-5-1<br>IP21 EN/IEC 60529<br>IP21 EN/IEC 61800-5-1<br>IP41 on upper part EN/IEC 60529<br>IP41 on upper part EN/IEC 61800-5-1<br>IP54 on lower part EN/IEC 60529<br>IP54 on lower part EN/IEC 61800-5-1 |
| Vibration resistance | 1 gn 13…200 Hz)EN/IEC 60068-2-6<br>1.5 mm peak to peak 3…13 Hz)EN/IEC 60068-2-6 |
| Shock resistance | 15 gn 11 ms EN/IEC 60068-2-27 |
| Relative humidity | 5…95 % without condensation IEC 60068-2-3<br>5…95 % without dripping water IEC 60068-2-3 |
| Ambient air temperature for operation | 14…122 °F (-10…50 °C) without derating) |
| Ambient air temperature for storage | -13…158 °F (-25…70 °C) |
| Operating altitude | <= 3280.84 ft (1000 m) without derating<br>3280.84...9842.52 ft (1000...3000 m) with current derating 1 % per 100 m |

## Ordering and shipping details

| | |
|---|---|
| Category | 22131 - ATV71 - 7.5 THRU 50HP |
| Discount Schedule | CP4C |
| GTIN | 00785901575269 |
| Nbr. of units in pkg. | 1 |
| Package weight(Lbs) | 26.4 lb(US) (11.97 kg) |
| Returnability | No |
| Country of origin | IN |

## Packing Units

| | |
|---|---|
| Unit Type of Package 1 | PCE |
| Package 1 Height | 11.61 in (29.5 cm) |
| Package 1 width | 15.75 in (40 cm) |
| Package 1 Length | 27.56 in (70 cm) |
| Unit Type of Package 2 | P06 |
| Number of Units in Package 2 | 1 |
| Package 2 Weight | 45.19 lb(US) (20.5 kg) |
| Package 2 Height | 30.31 in (77 cm) |
| Package 2 width | 31.50 in (80 cm) |
| Package 2 Length | 23.62 in (60 cm) |

## Offer Sustainability

| | |
|---|---|
| Sustainable offer status | Green Premium product |
| EU RoHS Directive | Pro-active compliance (Product out of EU RoHS legal scope) EU RoHS Declaration |
| Mercury free | Yes |
| RoHS exemption information | Yes |
| China RoHS Regulation | China RoHS Declaration |
| Environmental Disclosure | Product Environmental Profile |
| Circularity Profile | End Of Life Information |
| WEEE | The product must be disposed on European Union markets following specific waste collection and never end up in rubbish bins. |

## Contractual warranty

| | |
|---|---|
| Warranty | 18 months |

# ATV71HD30N4Z

## Variable Speed Drives without Graphic Display Terminal

### Dimensions without Option Card

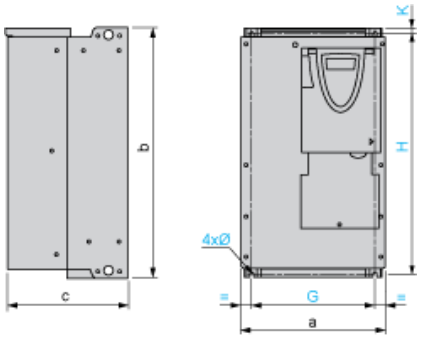


Dimensions in mm

| a | b | c | G | H | K | Ø |
|---|---|---|---|---|---|---|
| 240 | 550 | 230 | 206 | 531.5 | 11 | 6 |

Dimensions in in.

| a | b | c | G | H | K | Ø |
|---|---|---|---|---|---|---|
| 9.44 | 21.65 | 9.05 | 8.11 | 20.93 | 0.45 | 0.23 |

### Dimensions with 1 Option Card (1)

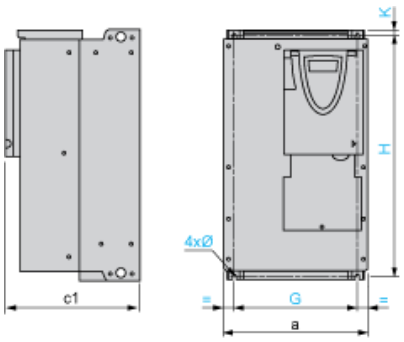


Dimensions in mm

| a | c1 | G | H | K | Ø |
|---|---|---|---|---|---|
| 240 | 233 | 206 | 531.5 | 11 | 6 |

Dimensions in in.

| a | c1 | G | H | K | Ø |
|---|---|---|---|---|---|
| 9.44 | 9.17 | 8.11 | 20.93 | 0.45 | 0.23 |

(1) Option cards: I/O extension cards, communication cards or "Controller Inside" programmable card.

## Dimensions with 2 Option Cards (1)

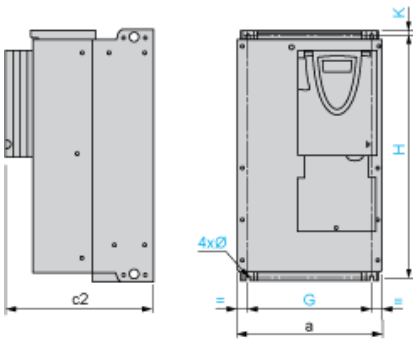


Dimensions in mm

| a | c2 | G | H | K | Ø |
|---|---|---|---|---|---|
| 240 | 276 | 206 | 531.5 | 11 | 6 |

Dimensions in in.

| a | c2 | G | H | K | Ø |
|---|---|---|---|---|---|
| 9.44 | 10.87 | 8.11 | 20.93 | 0.45 | 0.23 |

(1) Option cards: I/O extension cards, communication cards or "Controller Inside" programmable card.

## Mounting Recommendations

Depending on the conditions in which the drive is to be used, its installation will require certain precautions and the use of appropriate accessories.

Install the unit vertically:

- Avoid placing it close to heating elements
- Leave sufficient free space to ensure that the air required for cooling purposes can circulate from the bottom to the top of the unit.

## Clearance

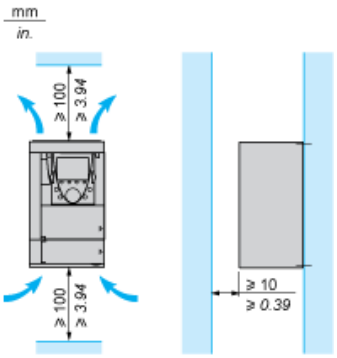


## Mounting Types

Type A Mounting

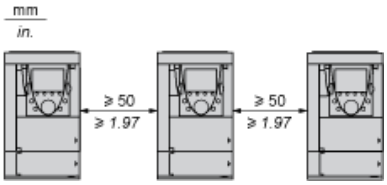


Type B Mounting

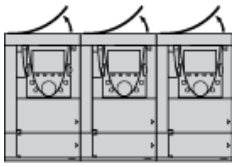

Type C Mounting

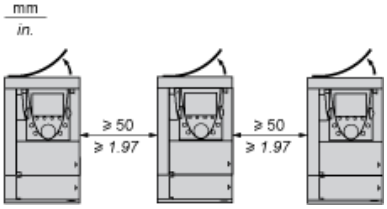


By removing the protective blanking cover from the top of the drive, the degree of protection for the drive becomes IP 20.

The protective blanking cover may vary according to the drive model (refer to the user guide).

The protective blanking cover must be removed from ATV 71P•••N4Z drives when they are mounted in a dust and damp proof enclosure.

## Specific Recommendations for Mounting the Drive in an Enclosure

## Ventilation

To ensure proper air circulation in the drive:

- Fit ventilation grilles.
- Ensure that there is sufficient ventilation. If there is not, install a forced ventilation unit with a filter. The openings and/or fans must provide a flow rate at least equal to that of the drive fans (refer to the product characteristics).

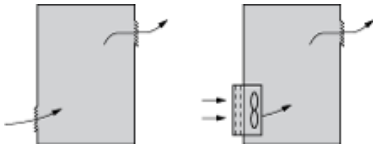

- Use special filters with IP 54 protection.
- Remove the blanking cover from the top of the drive.

## Dust and Damp Proof Metal Enclosure (IP 54)

The drive must be mounted in a dust and damp proof enclosure in certain environmental conditions: dust, corrosive gases, high humidity with risk of condensation and dripping water, splashing liquid, etc.

This enables the drive to be used in an enclosure where the maximum internal temperature reaches 50°C.

## Wiring Diagram Conforming to Standards EN 954-1 Category 1, IEC/EN 61508 Capacity SIL1, in Stopping Category 0 According to IEC/EN 60204-1

### Three-Phase Power Supply with Upstream Breaking via Contactor

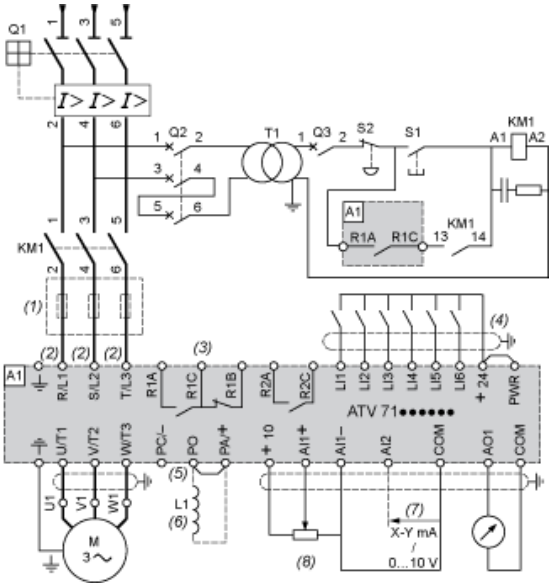


A1 ATV71 drive
KM1 Contactor
L1 DC choke
Q1 Circuit-breaker
Q2 GV2 L rated at twice the nominal primary current of T1
Q3 GB2CB05
S1, S2 XB4 B or XB5 A pushbuttons
T1 100 VA transformer 220 V secondary
(1) Line choke (three-phase); mandatory for ATV71HC11Y…HC63Y drives (except when a special transformer is used (12-pulse)).
(2) For ATV71HC40N4 drives combined with a 400 kW motor, ATV71HC50N4 and ATV71HC40Y…HC63Y, refer to the power terminal connections diagram.
(3) Fault relay contacts. Used for remote signalling of the drive status.
(4) Connection of the common for the logic inputs depends on the positioning of the SW1 switch. The above diagram shows the internal power supply switched to the “source” position (for other connection types, refer to the user guide).
(5) There is no PO terminal on ATV71HC11Y…HC63Y drives.
(6) Optional DC choke for ATV71H•••M3, ATV71HD11M3X…HD45M3X, ATV71•075N4…•D75N4 and ATV71P•••N4Z drives. Connected in place of the strap between the PO and PA/+ terminals. For ATV71HD55M3X, HD75M3X, ATV71HD90N4…HC50N4 drives, the choke is supplied with the drive; the customer is responsible for connecting it.
(7) Software-configurable current (0…20 mA) or voltage (0…10 V) analog input.
(8) Reference potentiometer.

All terminals are located at the bottom of the drive. Fit interference suppressors on all inductive circuits near the drive or connected on the same circuit, such as relays, contactors, solenoid valves, fluorescent lighting, etc.

## Wiring Diagram Conforming to Standards EN 954-1 Category 1, IEC/EN 61508 Capacity SIL1, in Stopping Category 0 According to IEC/EN 60204-1

## Three-Phase Power Supply with Downstream Breaking via Switch Disconnector

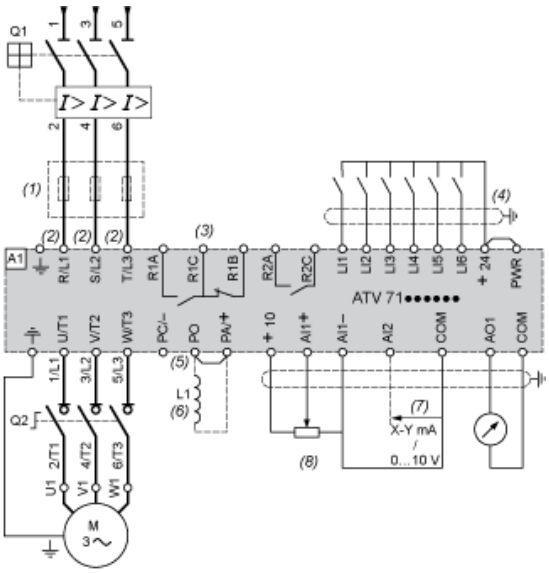


A1 ATV71 drive
L1 DC choke
Q1 Circuit-breaker
Q2 Switch disconnector (Vario)
(1) Line choke (three-phase), mandatory for ATV71HC11Y…HC63Y drives (except when a special transformer is used (12-pulse)).
(2) For ATV71HC40N4 drives combined with a 400 kW motor, ATV71HC50N4 and ATV71HC40Y…HC63Y, refer to the power terminal connections diagram.
(3) Fault relay contacts. Used for remote signalling of the drive status.
(4) Connection of the common for the logic inputs depends on the positioning of the SW1 switch. The above diagram shows the internal power supply switched to the “source” position (for other connection types, refer to the user guide).
(5) There is no PO terminal on ATV71HC11Y…HC63Y drives.
(6) Optional DC choke for ATV71H•••M3, ATV71HD11M3X…HD45M3X, ATV71•075N4…•D75N4 and ATV71P•••N4Z drives. Connected in place of the strap between the PO and PA/+ terminals. For ATV71HD55M3X, HD75M3X, ATV71HD90N4…HC50N4 drives, the choke is supplied with the drive; the customer is responsible for connecting it.
(7) Software-configurable current (0…20 mA) or voltage (0…10 V) analog input.
(8) Reference potentiometer.

All terminals are located at the bottom of the drive. Fit interference suppressors on all inductive circuits near the drive or connected on the same circuit, such as relays, contactors, solenoid valves, fluorescent lighting, etc.

## Wiring Diagram Conforming to Standards EN 954-1 Category 3, IEC/EN 61508 Capacity SIL2, in Stopping Category 0 According to IEC/EN 60204-1

## Three-Phase Power Supply, Low Inertia Machine, Vertical Movement

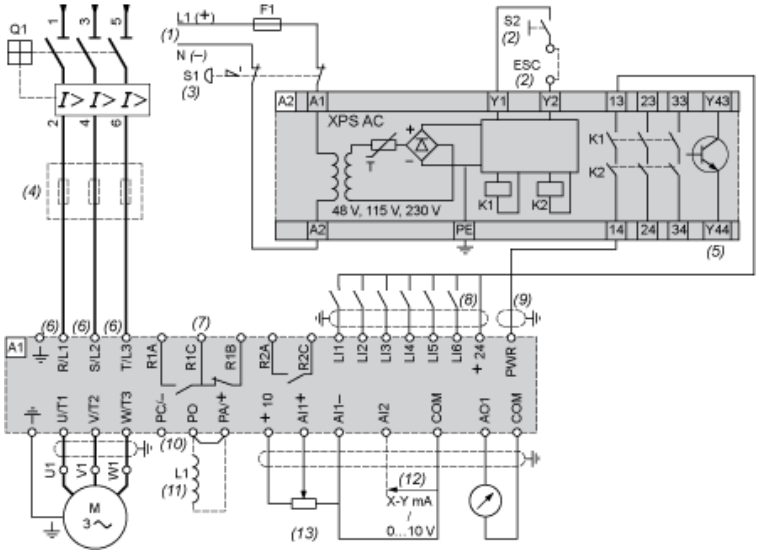


A1 ATV71 drive
A2 Preventa XPS AC safety module for monitoring emergency stops and switches. One safety module can manage the “Power Removal” function for several drives on the same machine. In this case, each drive must connect its PWR terminal to its + 24 V via the safety contacts on the XPS AC module. These contacts are independent for each drive.
F1 Fuse
L1 DC choke
Q1 Circuit-breaker
S1 Emergency stop button with 2 contacts
S2 XB4 B or XB5 A pushbutton
(1) Power supply: 24 Vdc or Vac, 48 Vac, 115 Vac, 230 Vac.
(2) S2: resets XPS AC module on power-up or after an emergency stop. ESC can be used to set external starting conditions.
(3) Requests freewheel stopping of the movement and activates the “Power Removal” safety function.
(4) Line choke (three-phase), mandatory for and ATV71HC11Y…HC63Y drives (except when a special transformer is used (12-pulse)).
(5) The logic output can be used to signal that the machine is in a safe stop state.
(6) For ATV71HC40N4 drives combined with a 400 kW motor, ATV71HC50N4 and ATV71HC40Y…HC63Y, refer to the power terminal connections diagram.
(7) Fault relay contacts. Used for remote signalling of the drive status.
(8) Connection of the common for the logic inputs depends on the positioning of the SW1 switch. The above diagram shows the internal power supply switched to the “source” position (for other connection types, refer to the user guide).
(9) Standardized coaxial cable, type RG174/U according to MIL-C17 or KX3B according to NF C 93-550, external diameter 2.54 mm /0.09 in., maximum length 15 m / 49.21 ft. The cable shielding must be earthed.
(10) There is no PO terminal on ATV71HC11Y…HC63Y drives.
(11) Optional DC choke for ATV71H•••M3, ATV71HD11M3X…HD45M3X, ATV71•075N4…•D75N4 and ATV71P•••N4Z drives. Connected in place of the strap between the PO and PA/+ terminals. For ATV71HD55M3X, HD75M3X, ATV71HD90N4…HC50N4 drives, the choke is supplied with the drive; the customer is responsible for connecting it.
(12) Software-configurable current (0…20 mA) or voltage (0…10 V) analog input.
(13) Reference potentiometer.

All terminals are located at the bottom of the drive. Fit interference suppressors on all inductive circuits near the drive or connected on the same circuit, such as relays, contactors, solenoid valves, fluorescent lighting, etc.

## Wiring Diagram Conforming to Standards EN 954-1 Category 3, IEC/EN 61508 Capacity SIL2, in Stopping Category 1 According to IEC/EN 60204-1

## Three-Phase Power Supply, High Inertia Machine

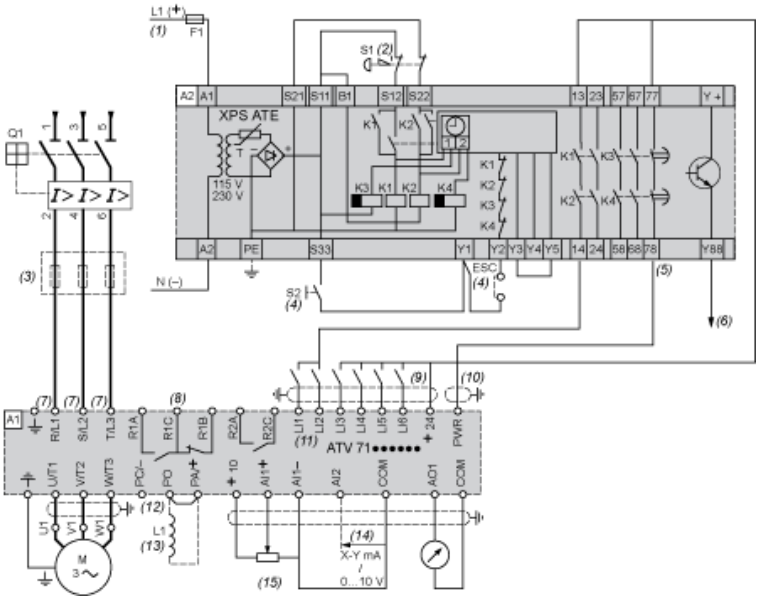


A1 ATV71 drive
A2 Preventa XPS ATE safety module for monitoring emergency stops and switches. One safety module can manage the "Power Removal"
(5) safety function for several drives on the same machine. In this case the time delay must be adjusted on the drive controlling the motor that requires the longest stopping time. In addition, each drive must connect its PWR terminal to its + 24 V via the safety contacts on the XPS ATE module. These contacts are independent for each drive.
F1 Fuse
L1 DC choke
Q1 Circuit-breaker
S1 Emergency stop button with 2 N/C contacts
S2 Run button
(1) Power supply: 24 Vdc or Vac, 115 Vac, 230 Vac.
(2) Requests controlled stopping of the movement and activates the “Power Removal” safety function.
(3) Line choke (three-phase), mandatory for ATV71HC11Y…HC63Y drives (except when a special transformer is used (12-pulse)).
(4) S2: resets XPS ATE module on power-up or after an emergency stop. ESC can be used to set external starting conditions.
(5) For stopping times requiring more than 30 seconds in category 1, use a Preventa XPS AV safety module which can provide a maximum time delay of 300 seconds.
(6) The logic output can be used to signal that the machine is in a safe state.
(7) For ATV71HC40N4 drives combined with a 400 kW motor, ATV71HC50N4 and ATV71HC40Y…HC63Y, refer to the power terminal connections diagram.
(8) Fault relay contacts. Used for remote signalling of the drive status.
(9) Connection of the common for the logic inputs depends on the positioning of the SW1 switch. The above diagram shows the internal power supply switched to the “source” position (for other connection types, refer to the user guide).
(10) Standardized coaxial cable, type RG174/U according to MIL-C17 or KX3B according to NF C 93-550, external diameter 2.54 mm/0.09 in., maximum length 15 m/49.21 ft. The cable shielding must be earthed.
(11) Logic inputs LI1 and LI2 must be assigned to the direction of rotation: LI1 in the forward direction and LI2 in the reverse direction.
(12) There is no PO terminal on ATV71HC11Y…HC63Y drives.
(13) Optional DC choke for ATV71H•••M3, ATV71HD11M3X…HD45M3X, ATV71•075N4…•D75N4 and ATV71P•••N4Z drives. Connected in place of the strap between the PO and PA/+ terminals. For ATV71HD55M3X, HD75M3X, ATV71HD90N4…HC50N4 drives, the choke is supplied with the drive; the customer is responsible for connecting it.
(14) Software-configurable current (0…20 mA) or voltage (0…10 V) analog input.
(15) Reference potentiometer.

All terminals are located at the bottom of the drive. Fit interference suppressors on all inductive circuits near the drive or connected on the same circuit, such as relays, contactors, solenoid valves, fluorescent lighting, etc.

## Derating Curves

The derating curves for the drive nominal current (In) depend on the temperature, the switching frequency and the mounting type. For intermediate temperatures (e.g. 55°C), interpolate between 2 curves.

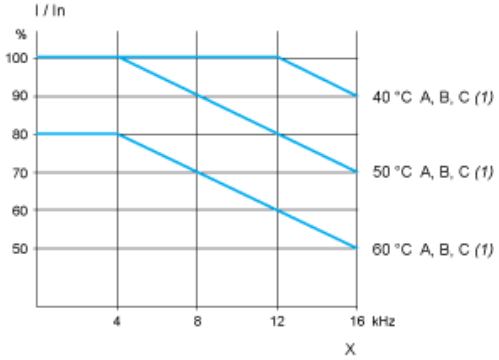


X Switching frequency
(1) Mounting type

Above 50ºC, the drive should be fitted with a control card fan kit.