Enabling movement

Two-hand ergonomic control stations

XY2SB

Catalog

October 2015



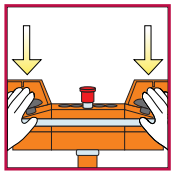

Schneider Electric



Quick access to product information

Get technical information about your product

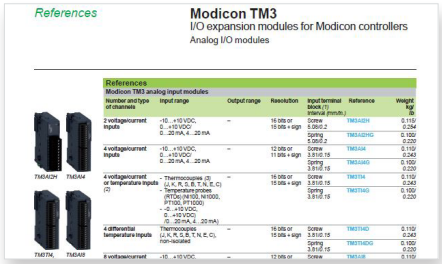

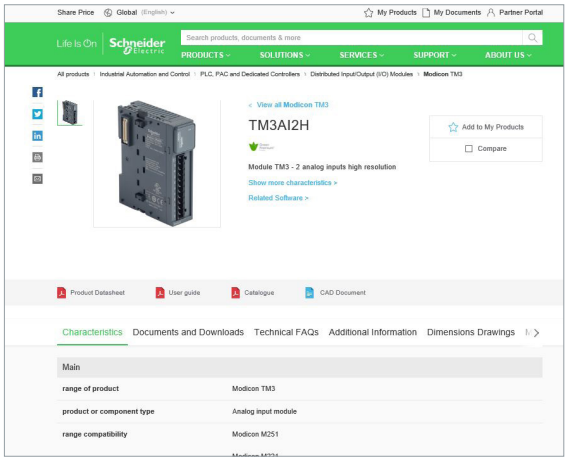

Each commercial reference presented in a catalog contains a hyperlink. Click on it to obtain the technical information of the product:

- Characteristics, Dimensions and drawings, Mounting and clearance, Connections and schemas, Performance curves
- Product image, Instruction sheet, User guide, Product certifications, End of life manual

Find your catalog

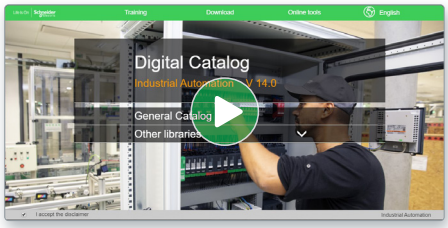

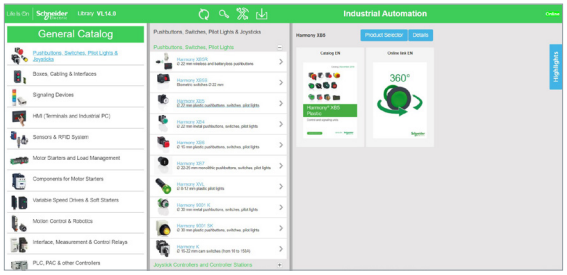

> With just 3 clicks, you can access the Industrial Automation and Control catalogs, in both English and French

> Consult digital automation catalogs at Digi-Cat Online

- Up-to-date catalogs
- Embeded product selectors,360° pictures
- Optimized search by commercial references

Select your training

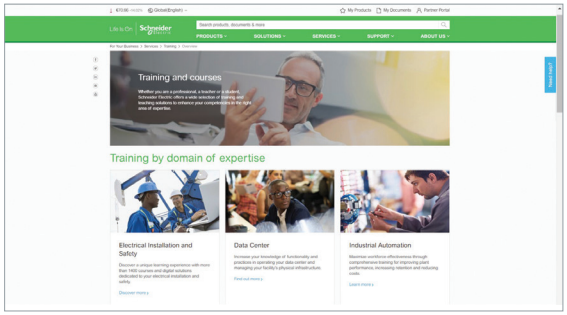

> Find the right Training for your needs on our Global website

> Locate the training center with the selector tool, using this link

Life Is On Schneider Electric

General contents

Enabling movement

Two-hand ergonomic control stations

XY2SB

- **Presentation** ..... page 4
- **Description** ..... page 5
- **Characteristics** ..... page 6
- **References**
  - Two-hand control stations - painted ..... page 7
  - Kits (control station + pedestal) ..... page 7
  - Documentation ..... page 7
  - Separate components and spare parts ..... page 8
- **Dimensions** ..... page 9
- **Product reference index**
  - Index ..... page 10

Enabling movement
Two-hand ergonomic control stations
With Harmony XB4 B control units

803047

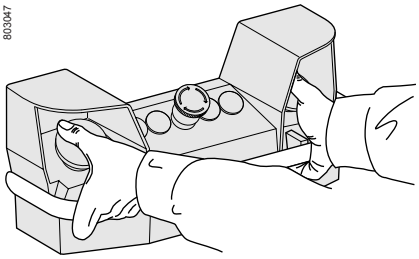

803045

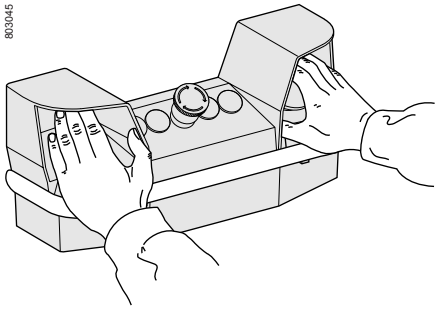

803046

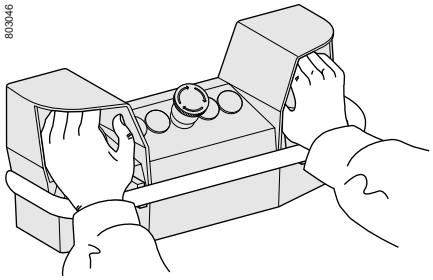

803044

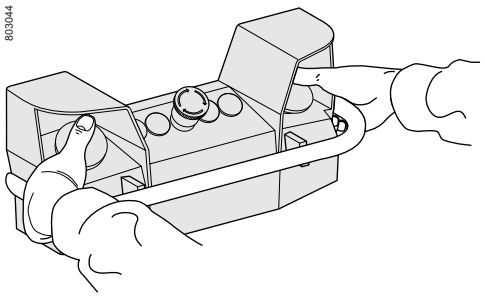

Presentation

The design of the control station incorporates features to significantly reduce occupational illnesses associated with repetitive movements of the hands, particularly “carpal tunnel syndrome”.

The health and comfort of the machine operator is assured by:
■ the numerous alternative hand positions for operating the 2 pushbutton actuators, see diagrams to left,

■ a hand rail,

■ simple and fast adjustments of control station position.

This two-hand control station protects machine operators against both industrial accidents and illnesses related to their occupation.

It conforms to the following European safety standards:
■ EN 574/ISO 13851 (two-hand control),

■ EN 999 (approach speeds of parts of the human body and positioning of safety devices).

The control station can be mounted:
■ directly on the machine housing,

■ on a pedestal, enabling 3 directional adjustment:
□ height,
□ rake,
□ skew.

The use of a two-hand control station in conjunction with a safety module type XPS BCE or XPS BF provides type IIIC two-hand control conforming to EN 574/ISO 13851 and PL e / Category 4 according to EN/ISO 13859-1.

The range comprises:
■ two-hand control stations with or without pre-wired terminal blocks,

■ kits (control station + pedestal), with or without pre-wired terminal blocks.

The products are supplied with an installation manual, which is also available as a separate item.

Enabling movement
Two-hand ergonomic control stations
With Harmony XB4 B control units

Description

The control station 1 has five cut-outs (Ø 22 mm) 2 as standard. Five additional cut-outs are possible 3.

Its pedestal 5 enables the following quick and simple adjustments:

- Control station rake (± 30°) using handle 4.
- Control station skew (± 180°) using handle 6.
- Control station height (835 to 1170 mm) using handle 6.

The baseplate 8 can be fitted with safety foot switches XPE R 9, together with their protective covers 7.

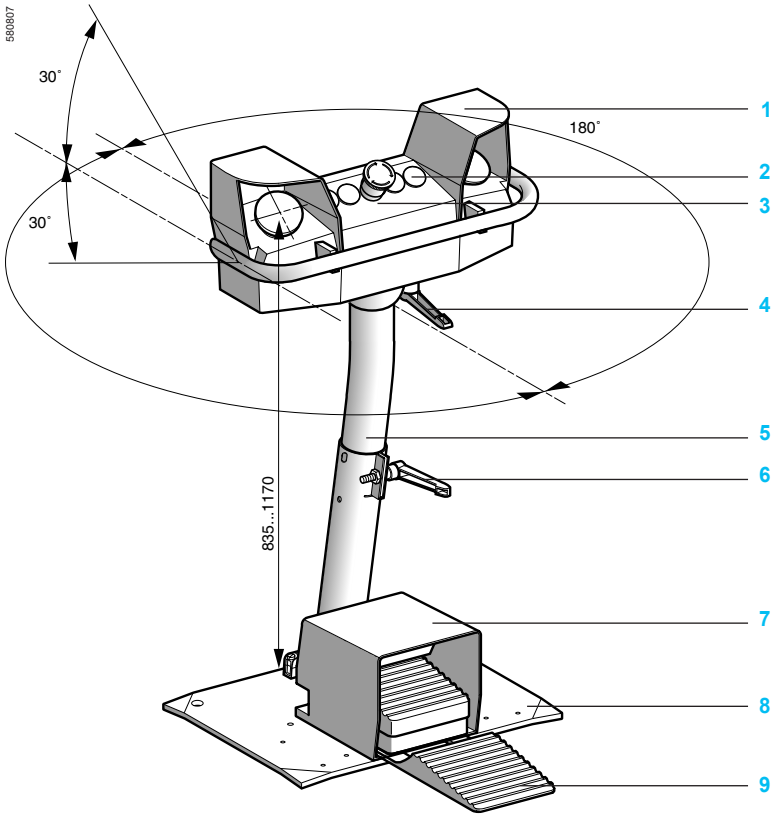

Enabling movement
Two-hand ergonomic control stations
With Harmony XB4 B control units

Characteristics

Environment

Conformity to standards			EN/IEC 60947-5-1, EN 574/ISO 13851		
Maximum safety level *(1)*			PL e, category 4 conforming to EN/ISO 13849-1 and SIL 3 conforming to EN/IEC 61508		
Reliability data B10d	Contact block Harmony XB4B		25,000,000 (data value for a service life of 10 years: can be limited by contact and mechanical wear)		
Colour			Orange RAL 2008		
Protective treatment	Standard version		"TC"		
Ambient air temperature	For operation	**°C**	- 25…+ 70		
	For storage	**°C**	- 40…+ 70		
Vibration resistance	Conforming to EN/IEC 60068-2-6		5 gn (2…500 Hz)		
Shock resistance	Conforming to EN/IEC 60068-2-27		10 gn (duration 11 ms)		
Electric shock protection	Conforming to EN/IEC 61140		Class I		
Degree of protection	Conforming to EN/IEC 60529		IP 65		
Mechanical life	Number of operating cycles		1 million		
Cable entries			See dimensions, page 9		

Contact block characteristics

Rated operational characteristics	~ AC-15		A600 or Ue = 240 V and Ie = 3 A		
	⎓ DC-13		Q600 or Ue = 250 V and Ie = 0.27 A conforming to EN/IEC 60947-5-1 Appendix A		
Rated insulation voltage	Conforming to EN/IEC 60947-1	**V**	Ui = 600, degree of pollution 3		
	Conforming to UL 508 and CSA C22-2 n° 14	**V**	Ui = 600		
Rated impulse withstand voltage	Conforming to EN/IEC 60947-1	**kV**	Uimp = 6		
Contact operation	Slow break, with positive opening operation		N/C + N/O break before make on each black actuator pushbutton N/C + N/C simultaneous on Emergency stop pushbutton N/C + N/O break before make on Lock out pushbutton		
Positive operation	Conforming to EN/IEC 60947-5-1 Appendix K		N/C contact with positive opening operation		
Terminal referencing			Conforming to CENELEC EN 50013		
Short-circuit protection	Conforming to EN/IEC 269		10 A cartridge fuse type gG (gl)		
Connection	Screw clamp terminals	**mm²**	Minimum clamping capacity: 1 x 0.22 or 1 x 0.22 + 1 x 0.34 Maximum clamping capacity: 1 x 2.5 or 2 x 1.5		
Electrical durability Conforming to EN/IEC 60947-5-1 Appendix C Operating rate: 3600 operating cycles/hour. Load factor: 0.5	a.c. supply for 1 million operating cycles utilisation category AC-15	**V**	24	120	230
		A	4	3	2
	d.c. supply for 1 million operating cycles utilisation category DC-13	**V**	24	110	
		A	0.5	0.2	
Electrical reliability	Failure rate According to EN/IEC 60947-5-4		At 17 V and 5 mA, $\lambda < 10^{-8}$ At 5 V and 1 mA, $\lambda < 10^{-6}$		

(1) Using an appropriate and correctly connected control system.

Enabling movement
Two-hand ergonomic control stations
With Harmony XB4 B control units

803051



XY2SB7●

Two-hand control stations - painted

Description	Mushroom head		Reference	Weight kg
	Function and colour	Contacts		
2 control pushbuttons with N/C + N/O break before make contacts and 1 mushroom head pushbutton	Emergency stop Red	N/C + N/C slow break	**XY2SB71**	4.000
	Lock out (Schaltsperre) Yellow	N/C + N/O break before make	**XY2SB75**	4.000
2 control pushbuttons with N/C + N/O break before make contacts and 1 mushroom head pushbutton, with pre-wired terminal block	Emergency stop Red	N/C + N/C slow break	**XY2SB72**	4.000
	Lock out (Schaltsperre) Yellow	N/C + N/O break before make	**XY2SB76**	4.000

803052

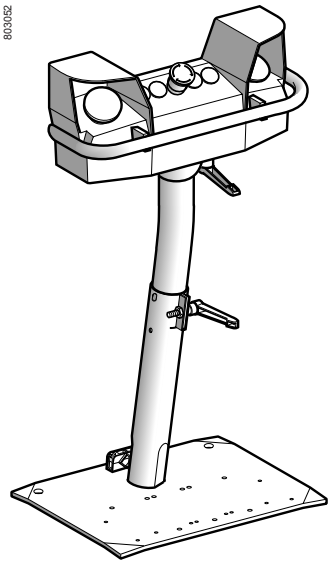

XY2SB7●4

Kits (control station + pedestal)

Description	Mushroom head		Reference	Weight kg
	Function and colour	Contacts		
2 control pushbuttons and 1 mushroom head Emergency stop pushbutton + pedestal XY2 SB90	Emergency stop Red	N/C + N/C slow break	**XY2SB714**	17.000
2 control pushbuttons and 1 mushroom head Emergency stop pushbutton, with pre-wired terminal block + pedestal XY2 SB90	Emergency stop Red	N/C + N/C slow break	**XY2SB724**	17.000

Documentation

Description	For use with	Reference	Weight kg
Installation manual	All control stations XY2 SB7●●	**XCOM2514**	0.200

Enabling movement
Two-hand ergonomic control stations
With Harmony XB4 B control units

803059_1

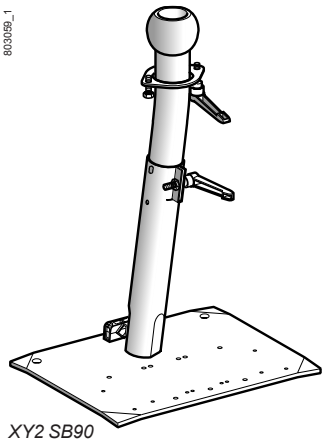

XY2 SB90

803057_1



XY2 SB98

803058_1

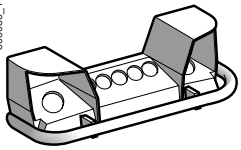

XY2 SB511

522964



XY2 SB99

803054_1



ZB4 BR216

803055_1



ZB4 BS844

503745

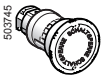

ZB4 BS845S

Separate components and spare parts

Various accessories

Description	For use with	Colour	Unit reference	Weight kg
Metal pedestal adjustableheight	XY2SB●●	Orange	**XY2SB90**	13.000
Collar for guard rail (weldedfixing)	XY2SB90	Orange	**XY2SB98**	0.800
Control station top withoutcontrol devices	–	Orange	**XY2SB511**	2.500
Control station base	–	Orange	**XY2SB531**	1.200
Double protective metal cover	Metal pedestal XY2SB90 and foot switches type XPE R	Orange	**XY2SB96**	4.370
Replacement handle (soldinlots of 5)	Metal pedestal XY2SB90	Black	**XY2SB93**	0.155
Replacement seals	–	–	**XY2SB99**	0.300
Adaptor (soldinlots of 5)	ISOM25	–	**DE9RA2125**	0.010
Fixing nut (soldinlots of 5)	Adaptor	–	**DE9EC21**	0.005

Control units *(1)*

Description	Component part	Colour	Reference	Weight kg
Pushbutton actuator	Ø 60 mm mushroom head	Black	**ZB4BR216**	0.095
	N/C + N/O body/contact assembly	–	**ZB4BZ105**	0.055
Emergency stop pushbutton	Ø 40 mm mushroom head	Red	**ZB4BS844**	0.060
	N/C + N/C body/contact assembly	–	**ZB4BZ104**	0.055
Lock out pushbutton	Ø 40 mm mushroom head	Yellow, marked “Schaltsperre”	**ZB4BS845S**	0.060
	N/C + N/O body/contact assembly	–	**ZB4BZ105**	0.055

(1) Other XB4B control and signalling units are suitable for use on the control stations. Please refer to our “Human Machine Interface catalogue”.

Enabling movement
Two-hand ergonomic control stations
With Harmony XB4 B control units

Dimensions

Control station
XY2 SB7●

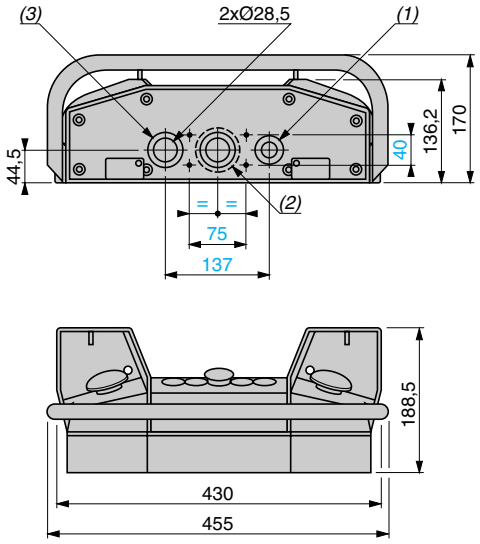

Pedestal
XY2 SB90

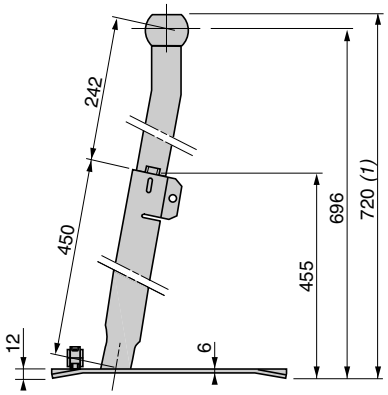

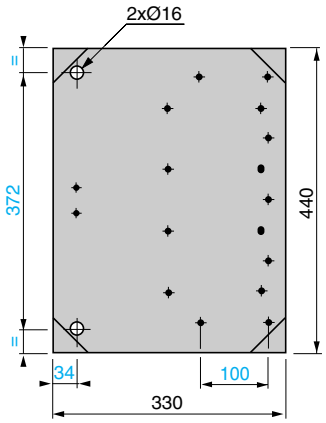

Double protective cover
XY2 SB96

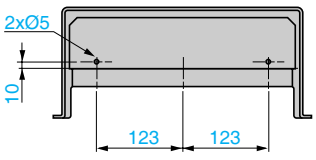

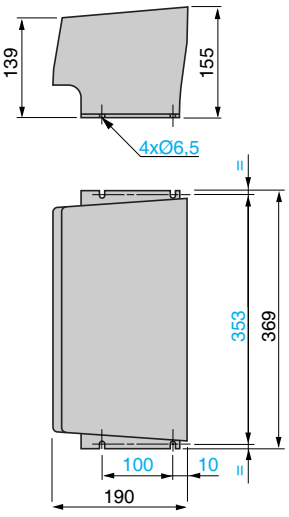

(1) 2 plain holes for n° 13 (PG13.5) or ISO M20 cable gland.
(2) Ø 56 mm knock-out specifically for mounting on pedestral.
(3) 1 plain hole for n° 21 (PG21) cable gland. For ISO M25, use adaptator DE9 RA2125 and fixing nut DE9 EC21.

(1) Adjustable height of pedestal 720 to 1060 mm.

Product reference index

D

DE9EC21	8
DE9RA2125	8

X

XCOM2514	7
XY2SB511	8
XY2SB531	8
XY2SB71	7
XY2SB714	7
XY2SB72	7
XY2SB724	7
XY2SB75	7
XY2SB76	7
XY2SB90	8
XY2SB93	8
XY2SB96	8
XY2SB98	8
XY2SB99	8

Z

ZB4BR216	8
ZB4BS844	8
ZB4BS845S	8
ZB4BZ104	8
ZB4BZ105	8
ZB4BZ105	8



More information on
http://www.schneider-electric.com/machinesafety

Schneider Electric Industries SAS

Head Office
35, rue Joseph Monier
F-92500 Rueil-Malmaison
France

The information provided in this documentation contains general descriptions and/or technical characteristics of the performance of the products contained herein. This documentation is not intended as a substitute for and is not to be used for determining suitability or reliability of these products for specific user applications. It is the duty of any such user or integrator to perform the appropriate and complete risk analysis, evaluation and testing of the products with respect to the relevant specific application or use thereof. Neither Schneider Electric nor any of its affiliates or subsidiaries shall be responsible or liable for misuse of the information contained herein.

Design: Schneider Electric
Photos: Schneider Electric

October 2015 - V1.1

Catalog-38147-EN